US Army Corps
of Engineers

Los Angeles District

LOS ANGELES COUNTY REGIONAL DREDGED MATERIAL MANAGEMENT PLAN PILOT STUDIES

LOS ANGELES COUNTY, CALIFORNIA

APPENDIX B2-EVALUATION OF CEMENT STABILIZATION ALTERNATIVE

U.S. Army Corps of Engineers
Los Angeles District
911 Wilshire Boulevard
Los Angeles, California 90017

November 2002

1 INTRODUCTION 1
1.1 Background 1
1.2 Cement Stabilization Objectives 2
1.3 Cement Stabilization Technology and Study Description 3
1.3.1 General Discussion of Cement Stabilization Technology 3
1.3.2 Bench and DMMP Pilot Studies Description 4
1.4 Report Organization 7

2 BASELINE CASE DEFINITION 8
2.1 Contaminated Sediment Source Material 8
2.2 Volumes 9
2.3 Equipment 9
2.4 Operational Considerations 9

3 EVALUATION CRITERIA 10

4 STUDY PLANNING 12
4.1 Bench Study 12
4.2 CSTF Coordination 14
4.3 Site and Material Selection 14
4.3.1 Site Selection 14
4.3.2 Source Sediment Selection 15
4.4 Work Plan 16
4.5 Permits and Approvals 16

5 PILOT STUDY DESIGN 17
5.1 Process Diagram and Units 17
5.1.1 Raw Material Holding Basin 17
5.1.2 Treatment Cells 17
5.1.3 Stockpiling Areas 18
5.1.4 Compaction Pads 19
5.2 Equipment 19
5.3 Binders and Mix Ratios 21
5.3.1 Binder Selection 21
5.3.2 Mix Ratio Selection 22
5.4 Sampling and Testing Program 23
5.4.1 Sampling 24
5.4.2 Testing 25

6 TREATMENT ACTIVITIES 29
6.1 Equipment Mobilization 29
6.2 Site Preparation 29
6.3 Raw Material Acquisition and Preparation 31

6.4 Preprocessing 31
6.5 Treatment 32
6.5.1 Mixing Head 32
6.5.2 Seawater Addition 33
6.5.3 Binder Addition 33
6.5.4 Blending 35
6.6 Stockpiling 37
6.7 Compaction Pad Placement 37
6.8 Compaction 38
6.9 Treatment Cell Backfill 39
6.10 Debris Disposal 40
6.11 Site Restoration 40
6.12 Demobilization 41
6.13 Documentation 41

7 SAMPLING AND TESTING ACTIVITIES 42
7.1 Sampling 42
7.1.1 Raw Sediment 42
7.1.2 Initial-Cured Sediment 43
7.1.3 7-Day-Cured Sediment 44
7.1.4 28-Day-Cured Sediment 44
7.1.5 Process Water 44
7.1.6 Binder 45
7.2 Testing 45
7.3 Quality Assurance And Quality Control 45

8 LABORATORY RESULTS 46
8.1 Geotechnical Characteristics 46
8.1.1 Grain Size 46
8.1.2 Atterberg Limits and Soil Classification 47
8.1.3 Moisture Content 48
8.1.4 Compaction 49
8.1.5 Unconfined Compressive Strength 51
8.1.6 Shear Strength 52
8.1.7 Consolidation 53
8.1.8 Permeability 54
8.1.9 R-Value 54
8.2 Chemical Characteristics 55
8.2.1 Raw Sediment Chemistry 55
8.2.2 Process Water Chemistry 56
8.2.3 Contaminant Leaching by Synthetic Precipitation Leaching Procedure (SPLP) and Waste Extraction Test (WET) 57
8.2.4 Sodium Chloride Leaching by Monolithic Leaching Test (MLT) 60

9 REVIEW OF EVALUATION CRITERIA 63
9.1 Technology Effectiveness 63
9.2 Implementability 64
9.3 Environmental Impacts....65
9.4 Cost 66

10 BASELINE CASE EXTRAPOLATED RESULTS....68
10.1 Baseline Case Project....68
10.1.1 Scenario 1: Land-Based Treatment.... 68
10.1.2 Scenario 2: Barge-Based Treatment.... 70
10.1.3 Basis for Scale-Up Adjustment 71
10.2 Predicted Performance....73
10.2.1 Technology Effectiveness 73
10.2.2 Implementability 74
10.2.3 Environmental Impacts 75
10.2.4 Cost 76

11 CONCLUSIONS AND LESSONS LEARNED 78
11.1 Conclusions 78
11.2 Lessons Learned 78

12 REFERENCES....80

List of Tables

Table B2-1 Cell Volumes
Table B2-2 Binder Mix Ratios
Table B2-3 Bench Study Test Series and Binder Mix Ratios
Table B2-4 Process Equipment
Table B2-5 Design Mix Ratios
Table B2-6 Sampling Matrix
Table B2-7 Testing Matrix
Table B2-8 Mobilization and Demobilization
Table B2-9 Treatment Cell Holding Capacities
Table B2-10 Mix Ratios Achieved in Field
Table B2-11 Grain Size
Table B2-12 Atterberg Limits
Table B2-13 Moisture Content
Table B2-14 Compaction Characteristics
Table B2-15 Compressive Strength
Table B2-16 Shear Strength
Table B2-17 Consolidation
Table B2-18 Permeability
Table B2-19 R-Value
Table B2-20 Constituents Exceeding Effects Levels

Table B2-21 Contaminant Leaching
Table B2-22 Sodium Chloride Leaching
Table B2-23 Treatment Costs
Table B2-24 Full-Scale Land-Based Cement Stabilization Project Cost

List of Photos

Photo B2-1 Treatment Cell under Construction
Photo B2-2 Completed and Secured Cell
Photo B2-3 POLA Anchorage Road Dredged Material Holding Basin
Photo B2-4 Dredged Material Placement into Treatment Cell
Photos B2-5A Debris Removal
Photo B2-5B Debris Removal
Photo B2-6 Removed Debris
Photo B2-7 Debris Disposal
Photo B2-8 Mixing Assembly and Mixing Head
Photo B2-9 Water Addition and Blending
Photo B2-10 Water Addition and Blending
Photo B2-11 Blending
Photo B2-12 Freshly Blended Material
Photo B2-13 Material after Initial Curing
Photo B2-14 Firmness of Initially Cured Material
Photo B2-15 Excavation and Transfer of Treated Material for Stockpiling
Photo B2-16 Stockpiling
Photo B2-17 Initial Lifts of Compaction Pad
Photo B2-18 Disked Compaction Layer
Photo B2-19 Compaction and Disking

List of Figures

Figure B2-1 Site Location Map
Figure B2-2 Treatment and Compaction Site Layout
Figure B2-3 Process Diagram
Figure B2-4 Plan and Cross Section of Treatment Cell

List of Attachments

Attachment A Operations and Laboratory Analyses Summary Report (Waste By Rail)
Attachment B Laboratory Geotechnical Analyses (Smith Emery GeoServices) – *Available from U.S. Army Corps of Engineers, Los Angeles District*
Attachment C Laboratory Chemical Analyses (ToxScan) – *Available from U.S. Army Corps of Engineers, Los Angeles District*

The following acronyms are used throughout the document:

CDF	confined disposal facility
CERCLA	Comprehensive Environmental Response, Compensation, and Liability Act
cm	centimeter
CSTF	Los Angeles Contaminated Sediments Task Force
DGPS	Differential Global Positioning System
DMMP	Los Angeles County Regional Dredged Material Management Plan
DMMP Pilot Studies	Los Angeles County Regional Dredged Material Management Plan Pilot Studies
ECDC	A hazardous waste hauling and disposal company (see Waste by Rail)
EPA	U.S. Environmental Protection Agency
ERDC	U.S. Army Corps of Engineers' Engineering Research and Development Center, Waterways Experiment Station
ER-L	Effects Range-Low
FY	Fiscal Year
km	kilometer
LARE	Los Angeles River Estuary
LARWQCB	Los Angeles Regional Water Quality Control Board
m^3	cubic meter
mg/L	milligrams per liter
MLLW	mean lower low water
NEIBP	North Energy Island Borrow Pit
POLA	Port of Los Angeles
POLB	Port of Long Beach
SEIBP	South Energy Island Borrow Pit

SPI	sediment profile imaging
TDS	total dissolved solids
TSS	total suspended solids
USACE	U.S. Army Corps of Engineers, Los Angeles District
WBR	Waste by Rail *(formerly ECDC)*

1 INTRODUCTION

The U.S. Army Corps of Engineers (USACE), Los Angeles District initiated Los Angeles County Regional Dredged Material Management Plan Pilot Studies (DMMP Pilot Studies) in 2001 to evaluate the feasibility of disposing or treating contaminated sediments located within the Los Angeles County region. There were four alternatives identified in the Los Angeles County Regional Dredged Material Management Plan (DMMP) 905(b) Reconnaissance Report (USACE 2000):

- **Aquatic Capping** – dredging and placing contaminated sediments into an inner Los Angeles/Long Beach Harbor borrow pit and capping with clean sediments.
- **Cement Stabilization** – dredging and rehandling contaminated sediments to an upland staging area where dredged sediments are mixed with a cement-based product to create structurally stable material and to bind the contaminants.
- **Sediment Washing** – dredging and rehandling contaminated sediments to an upland staging area where the dredged sediments are washed to remove chloride, allowing disposal or use upland.
- **Sediment Blending** – dredging and rehandling contaminated sediments to an upland staging area and blending the sediments with various additives to create structurally stable material.

The four DMMP Pilot Studies were performed in late 2001 through early 2002. This appendix details the results and project evaluation of the Cement Stabilization Pilot Study.

1.1 Background

Los Angeles County's coastline includes two of the nation's largest commercial ports and several major marina complexes and small-vessel harbors. Periodic dredging is required to maintain authorized depths in existing channels and berths, and to support expansion and modernization of ports, harbors, and marinas. Some of the sediments dredged from these harbors contain elevated levels of heavy metals, pesticides, and other contaminants. In most cases, the concentrations of these contaminants do not approach hazardous levels. However, the sediments may contain enough contaminants that they are not suitable for unconfined ocean disposal. Additionally, California State's Bay Protection and Toxic Cleanup Program has identified bays and estuaries containing areas with contaminated sediments. Contaminated sediment disposal requires special

management, such as placement in a contained aquatic disposal site, capping, or disposal at an upland site. Additionally, some ports and harbors have considered other management techniques, such as treatment and beneficial use.

The regulatory agencies evaluate disposal options for these projects on a case-by-case basis without the benefit of a regional perspective on management alternatives, cumulative impacts, and long-term solutions to prevent re-contamination of sediment. This approach has led to public concern over the ecological and human health implications of contaminated dredged material disposal. To resolve these issues, the regulatory and resource agencies, ports and harbors, environmental groups, and other interested parties agreed to establish the Los Angeles Contaminated Sediments Task Force (CSTF). The CSTF was formed in 1998 and chartered with developing a long-term management strategy for contaminated sediments. This strategy will be presented in the CSTF's Strategy Report. The USACE, local, state and federal resource and regulatory agencies, and local environmental groups are active participants in the CSTF.

Even though the USACE is an active participant in the CSTF, the USACE is independently developing a long-term management strategy (i.e., DMMP) for both clean and contaminated sediments. The project study area for the DMMP is located along the coastal waters of Los Angeles and includes Marina del Rey, the Ports of Long Beach (POLB) and Los Angeles, and the Los Angeles River Estuary (LARE). The non-Federal sponsors for the DMMP feasibility study are the County of Los Angeles, City of Long Beach, and Port of Los Angeles (POLA). While many of the objectives under the USACE DMMP Feasibility Study and the CSTF Strategy Report overlap, there may be key differences in approach or conclusions reached under each program. The intent of both the USACE and CSTF is to coordinate the two study efforts as much as possible to minimize duplication of effort, and to develop a unified approach for the long-term management of contaminated dredged sediment.

1.2 Cement Stabilization Objectives

The Cement Stabilization Pilot Study's main objectives include:

- Evaluate Cement Stabilization effectiveness for treating contaminated sediments from Los Angeles County in laboratory and field environments.

- Evaluate operations parameters to assess Cement Stabilization implementability in the region.
- Evaluate cost parameters to assess Cement Stabilization costs in the region.
- Evaluate potential environmental impacts of a Cement Stabilization project.

1.3 Cement Stabilization Technology and Study Description

1.3.1 General Discussion of Cement Stabilization Technology

Stabilizing contaminated sediments with cement-based additive mixes is a treatment technology that converts contaminants in the material into less soluble, mobile or toxic forms and enhances the physical properties of the material. The technology, commonly known as Cement Stabilization has been widely used in upland soil remediation projects. Its application to contaminated sediments has been relatively limited. This may be due to the large sediment volumes typically involved in dredging projects, special sediment handling requirements, and the variable site-specific physical and chemical characteristics of dredged sediments.

A Cement Stabilization process uses cement-based binders (binders) such as Portland cement to precipitate metal ions, react with specific analytes, and bind or encapsulate specific contaminants. In a typical process, the binder is mechanically blended into the dredged sediment. The cement reacts with process water and pore water in the dredged sediment (hydration) to produce a binding gel (e.g., Tobermorite gel). The binding gel coats the contaminated fine particles, cements them into larger clusters, and fills up the micro-pores in the material's microstructure. The reactions consume water through hydration, produce calcium hydroxide that reacts with siliceous particles to create additional binding gel, and generate heat that accelerates dewatering. Upon adequate curing, the reactions immobilize/encapsulate contaminants in the microstructure of the treated material and enhance the material's engineering properties such as shear strength, compaction, and consolidation characteristics.

In addition to using pure Portland cement, coal ash, or fly ash, is often used in combination with cement for pozzolanic reactions to reduce binder cost while maintaining and, in some cases, improving treatment results. Fly ash generally relies

on products from Portland cement hydration, primarily calcium hydroxide, to trigger pozzolanic reactions, produce cementing characteristics, and harden on curing. With appropriate proportioning with Portland cement, cement/fly ash-treated products can increase strength characteristics over using cement only. Since fly ash is typically less expensive than Portland cement, it has been extensively used in combination with cement in Cement Stabilization projects.

Cement stabilization has been applied on a limited basis to dredged sediments including stabilization projects in New York/New Jersey Harbors (Loest & Wilk, 1998). A majority of studies have been bench-scale (laboratory) investigations (Myers & Zappi, 1992; Guven, 1997). The technology has yet to demonstrate its effectiveness, technically and economically, as a viable long-term option in treating contaminated dredged sediment on a large-scale basis in the Los Angeles County region.

1.3.2 Bench and DMMP Pilot Studies Description

The Cement-Based Stabilization Studies consisted of a bench-scale study (Bench Study) and a field-scale study (Pilot Study) for applying cement-based stabilization technology to contaminated dredged sediment. The Bench Study was initiated by the USACE as a precursor to the Pilot Study to develop laboratory data on Cement Stabilization effectiveness in treating contaminated sediments. The primary objective for conducting the Bench Study was to provide guidance for developing Pilot Study design criteria. However, due to funding and scheduling constraints, it was necessary to initiate the Pilot Study before completing the Bench Study. The lack of Bench Study results was mitigated by active involvement of the Pilot Study team in reviewing the Bench Study preliminary results that enabled Pilot Study development and field construction implementation.

Moffatt & Nichol Engineers (M&N), MEC Analytical (MEC) and Waste by Rail (WBR) conducted the Bench Study under separate contract with the USACE. Sediment samples were taken from four marine sites in Los Angeles County. The four sites were: Marina del Rey, LARE, POLB Channel 2, and POLA Consolidated Slip. The Bench Study implemented a relatively wide range of binder mixes including Portland cement, fly ash and fluidized bed ash, and provided substantial data for evaluating

the Cement Stabilization effectiveness in treating dredged sediments from the Los Angeles County region. Bench Study details are documented separately in Appendix B1.

The Pilot Study project site was constructed at the POLA's Anchorage Road site (project site). The project site location is marked on the location map shown in Figure B2-1. WBR (i.e., Contractor) conducted the construction under USACE oversight. SEG GeoServices (SEG) performed field sample collection. SEG and ToxScan performed the geotechnical, chemical, and leachate testing. The Pilot Study construction started on August 31, 2001 and was completed on October 30, 2001. The construction activities at the project site included the following activites:

- Site preparation
- Treatment
- Residual management

The project site was prepared by laying out and constructing four treatment cells, four compaction pads and stockpile areas within an open land parcel approximately 30 to 46 meters (m) wide by 55 to 61 m long. Each treatment cell was created by excavating a pit approximately 1.5 m deep, with an approximate side slope of 1 vertical to 1.5 horizontal (1:1.5). The treatment cell was surrounded by berms that were approximately 1.2 m high. Table B2-1 shows the cell capacities.

Table B2-1
Cell Volumes

Cell	Capacity (m^3)
1	500
2	488
3	444
4	419

The dredged sediment used in the Pilot Study was obtained from a dredged material holding basin near the project site. The source sediment was previously dredged from various Los Angeles/Long Beach Harbor channels and stockpiled in the pond for a period of days to weeks. This source sediment was excavated from the holding

basin, hauled to the nearby project site by dump trucks, and placed in the treatment cells by the Port's dredging contractor.

To create an "as-dredged" condition for the relatively dry material from the holding basin, the Contractor added water from nearby POLA Consolidated Slip to the filled cells and blended the sediment and water with a rake-headed excavator. The same equipment was then used to rake the material to remove debris. A long-stick excavator equipped with a rotary mixer was then used to blend in binder mixes at mix ratios listed in Table B2-2.

Table B2-2
Binder Mix Ratios

Cell	Binder Mix Ratio	
	Portland Cement (Type II) (% wet weight)	Fly Ash (Class F) (% wet weight)
1	1.5	0.0
2	2.0	2.0
3	6.0	0.0
4	2.0	4.0

Upon thorough mixing over a specified time, the mixed sediment went through an initial in-cell curing period of approximately 12 to 24 hours.

After initial in-cell curing, the treated sediment was transferred from the treatment cells to on-site stockpiling using an excavator and loader. The treated sediment was then relocated to on-site compaction pads, placed in lifts, compacted, and allowed to complete its 28-day curing. Coring samples were taken during the 28-day curing period to run geotechnical, chemical, and leachate tests.

After the 28-day curing period was completed, the treated sediment was spread on-site. Debris and operations wastes were collected in roll-off containers, hauled to, and disposed of at an ECDC landfill in Utah in compliance with applicable regulatory requirements. The project site was restored to pre-project conditions as required by the POLA.

1.4 Report Organization

Sections 1 to 5 provide information on the background, planning, and design of the Pilot Study. Sections 6 to 8 provide descriptions of field work activities and summarize laboratory test results. Sections 9 to 10 evaluate the Pilot Study results on an as-conducted basis and on the basis of a scaled-up Baseline Case. The basis for scaling up the results of the as-conducted Pilot Study to the Baseline Case is presented.

Pilot Study conclusions and lessons learned are provided in Section 11. The references used in this report are listed in Section 12. Supporting documents are provided as attachments.

2 BASELINE CASE DEFINITION

In order to evaluate each Pilot Study alternative relative to each other, a "Baseline Case" project scenario was defined to identify a consistent set of site conditions and operational practices. These consistent conditions are applied to each alternative to allow equal assessment between the alternatives. The Baseline Case does not represent an actual project. Rather, it is a conceptual project that can be used as a standard assessment against the other alternatives to be evaluated. In general, the Aquatic Capping Alternative was identified as the model for the Baseline Case. The following sections describe the Baseline Case in detail.

2.1 Contaminated Sediment Source Material

The Baseline Case contaminated sediment source is identified as material dredged from the LARE. The specific location of the dredged material is upstream of the Queensway Bridge (i.e., immediately upstream of the Queensway Marina). This location was selected since it represents an on-going source of deposited sediment from the Los Angeles River, which is periodically maintenance dredged to maintain navigation depth for vessels using the Queensway Marina. This location was dredged as part of the Aquatic Capping Pilot Study.

Sediment chemical characterization of the LARE sediments during the Aquatic Capping Pilot Study was completed and indicated that the typical sediment was not acceptable for ocean disposal, but well below hazardous waste concentrations. Detailed chemistry results from LARE testing are presented in Appendix A.

The physical characteristics of LARE sediments were evaluated by collecting four cores in the LARE dredge area 4.6 to 4.9 m (15 to 16 feet) below mudline. The general description of LARE sediment for the Baseline Case was, "silty sand with trace clay and occasional organics". The volume weighted grain size distribution of the four cores was:

- Gravel content of 1 percent
- Sand content of 77 percent
- Silt content of 17 percent
- Clay content of 5 percent

2.2 Volumes

The Baseline Case assumes an in-situ dredged volume of 100,000 m^3. For alternatives involving upland operations, the Baseline Case assumes insignificant dredged sediment bulking due to the high percentage of sand.

Each of the Pilot Study Alternatives will have additional volumes of materials specific to each alternative that will not be discussed here. For example, the Aquatic Capping Alternatives also includes capping material volume, while the Cement Stabilization includes additive volumes. These secondary volumes will be determined based on disposal/treatment of the primary 100,000 m^3 volume.

2.3 Equipment

The Baseline Case assumes that all sediments are mechanically dredged with a clamshell dredge and placed into barges (e.g., split-hull for open water disposal alternatives and haul barges for transport to an upland offloading site). Two barges, one tugboat, and one workboat are assumed to be part of the standard equipment list for dredging operations.

Additional required equipment for each specific alternative will be included in the cost estimates and alternatives description.

2.4 Operational Considerations

Dredged sediment disposal or treatment can be a limiting factor for the overall project production rate. To provide a comparable assessment between alternatives, a constant project production rate for dredging operations needs to be assumed and was set at 2,000 m^3 per day.

The Baseline Case assumes that no special best management practices, such as using silt curtains, will be applied. The overall project production rate is assumed to incorporate for similar operational controls in all alternatives to minimize potential water quality impacts.

3 EVALUATION CRITERIA

Evaluation criteria were selected early in the DMMP Pilot Studies planning process to help focus the field sampling and testing efforts during the design and construction of both bench-scale and field scale projects. The evaluation criteria were generally based on the U.S. Environmental Protection Agency (EPA) Comprehensive Environmental Response, Compensation, and Liability Act (CERCLA) balancing criteria, which include: short-term effectiveness; long-term effectiveness and permanence; reduction of mobility, toxicity, and volume through treatment; implementability; and cost. The CERCLA evaluation criteria were slightly modified to better match the objectives for the DMMP Pilot Studies. The selected evaluation criteria were discussed and approved by both the USACE and CSTF and are defined in more detail below:

- **Short-Term Effectiveness.** This evaluation criterion addresses the effectiveness of the alternative during the construction and implementation phase until the sediment management objectives are met. Sediment management objectives vary depending upon the alternative. For Aquatic Capping, short-term effectiveness refers to the alternative's ability to control contaminated sediment loss during dredging, placement, and capping operations and result in isolated sediments immediately after construction. For the treatment alternatives (i.e., Cement Stabilization, Sediment Washing and Sediment Blending), short-term effectiveness refers to the ability to control contaminated sediment loss during dredging, transport, handling, and treatment and the ability to reduce the mobility, toxicity or volume of contaminants immediately after the treatment process is complete. For the treatment alternatives, short-term effectiveness also refers to the ability to meet secondary objectives, such as improving the physical characteristics for beneficial use, immediately after treatment.
- **Long-Term Effectiveness.** This evaluation criterion addresses the effectiveness of the alternative in maintaining sediment management objectives after the construction and implementation phase over the long term (e.g., years). For Aquatic Capping, long-term effectiveness refers to the ability of the constructed facility to continually isolate contaminants from the marine environment. For the treatment alternatives, long-term effectiveness refers to the alternatives' ability to maintain the reduced mobility, toxicity or volume of contaminants initially achieved by the treatment process. For the treatment alternatives, long-term effectiveness also refers to the

ability to maintain secondary objectives, such as improving the physical characteristics for beneficial use.

- **Implementability.** The implementability criterion addresses the technical feasibility of implementing an alternative and the availability of various services and materials required during its implementation. For this Evaluation Report, this criterion focuses on the technical issues relating to construction of the alternative (e.g., availability of equipment, experienced personnel, and sites), and does not include evaluating the administrative issues (e.g., regulatory approval and permitting).
- **Environmental Impacts.** This evaluation criterion addresses whether a specific alternative poses unacceptable short-term (i.e., during or immediately after construction) impacts. For Aquatic Capping, short-term impacts are primarily water and sediment quality related. For the treatment alternatives, short-term impacts are primarily upland related, though some may also include water quality issues.
- **Cost.** This evaluation criterion addresses the associated capital costs (both direct and indirect costs) and annual operations and maintenance costs for each alternative. Cost evaluation does not include short-term or long-term monitoring because these costs can significantly vary for different projects.

4 STUDY PLANNING

This section discusses planning activities including bench-scale study review, coordination with regional stakeholders, project site and source material selection, Work Plan development as well as obtaining permits and approvals for the project.

4.1 Bench Study

A bench-scale study was initiated by the USACE prior to the Pilot Study to develop laboratory data on Cement Stabilization of dredged sediments from the region. One of the primary purposes of the Bench Study was to provide guidance for developing Pilot Study design criteria by providing laboratory-scale treatability data on which appropriate treatment parameters such as binder mix ratios could be selected for the Pilot Study.

Sediment samples from four marine sites within Los Angeles County were collected for the Bench Study. These sites included:

- Marina del Rey
- Los Angeles River Estuary
- Port of Long Beach Channel 2
- Port of Los Angeles Consolidated Slip

The binders used to stabilize the sample sediments included the following:

- Portland cement, ASTM C-150, Type II
- Fly Ash, ASTM C-618, Class F
- High lime fluidized bed ash

Table B2-3 lists the Bench Study test series and corresponding binder mix ratios reproduced from Appendix B1.

Table B2-3
Bench Study Test Series and Binder Mix Ratios

Sample	Binder	Binder Mix Ratio (% wet weight)											
		#1	#2	#3	#4	#5	#6	#7	#8	#9	#10	#11	#12
Los Angeles River Estuary	Cement	8	6	4	6	4	2	6	4	2	No Binder. Raw Material		
	Fly Ash							4	6	8			
	FB Ash				6	8	10	2	4	6			
Marina del Rey	Cement	8	6	4	6	4	2	6	4	2			
	Fly Ash							4	6	8			
	FB Ash				6	8	10	2	4	6			
POLB Channel 2	Cement	8	6	4	6	4	2	6	4	2		2	
	Fly Ash							4	6	8			
	FB Ash				6	8	10	2	4	6			
POLA Consolidated Slip	Cement	8	6	4	6	4	2	6	4	2		2	2
	Fly Ash							4	6	8			4
	FB Ash				6	8	10	2	4	6			

Geotechnical, chemical, and leachate tests were performed on the sample sediments at different stages during the stabilization process, from untreated sediment testing through testing after completion of 28-day curing. The main findings of the Bench Study are summarized below:

- The leaching potential of contaminants in the untreated sediments is notably low in spite of the high levels of sediment-sorbed constituents in the sediments from source sites such as the POLA Consolidated Slip. Among an extensive suite of analyzed constituents, only a few chemicals exhibited leachate concentration levels above method detection limits.
- Cement Stabilization is effective in reducing metal constituent leachability. Arsenic, which was the only metal detected in the leaching tests, was reduced to below detection limits after stabilization.
- For the range of binder to raw sediment mix ratios tested, Cement Stabilization is less effective in binding organic constituents, although a general trend of leachate reduction with increasing binder content was observed for Polycyclic Aromatic Hydrocarbons (PAHs) in several of the leaching tests. Higher mix ratios may improve leachate reduction.
- Cement Stabilization significantly enhances the geotechnical properties of the sediment in terms of compressive strength and shear strength. The treated

sediment exhibits adequate performance characteristics for use as an engineering fill.

The Bench Study implemented a relatively wide range of binder mix designs and provided a substantial set of data for stabilizing contaminated dredged sediment from representative sites in the Los Angeles County regional. However, due to funding and scheduling constraints, it was necessary to conduct the Pilot Study before completing the Bench Study. The Bench Study results presented in this Appendix were not available when designing the Pilot Study. This circumstance resulted in a lack of supporting data as a guide for developing Pilot Study testing scopes. This difficulty was mitigated by the active involvement of the Pilot Study team in reviewing Bench Study sampling and testing activities, progress, test observations, and initial raw test data. Information collected from these activities enabled development of a focused test program that was implemented in the Pilot Study.

4.2 CSTF Coordination

The CSTF was regularly updated and informed throughout the development, construction, and evaluation phases of the Cement Stabilization Pilot Study. Coordination with the CSTF was conducted through meetings, presentations, site visits for the CSTF members, and results summary distribution. The Work Plan, Sampling/Testing Program, Evaluation Report Outline, and other project documents were distributed to and reviewed and approved by the CSTF.

4.3 Site and Material Selection

4.3.1 Site Selection

Site selection for the Pilot Study was conducted based on open spaces that were available within the Ports. The siting criteria considered not only the convenience of execution and successful completion of the present Pilot Study, but also the scalability of the project conducted at such a site for future full-scale projects. The primary siting criteria consisted of the following:

- The project site needs to be located in an area suitable for material handling and be typical of space available on a recurring basis in the future.

- The project site should be located at or near waterfront that is convenient for efficient transfer of dredged sediments from barges via upland equipment or short truck haul.
- The project sites needs to have sufficient area and be suitable for material handling as required for the approximate 2,000 m^3 Pilot Study

The project site was selected in coordination with the POLA and POLB. Early stages of the site selection process were based on a dockside, in-barge treatment. Efforts were focused on vacant wharf sites with docking space. Initial review with the Ports identified the availability of the Southwest Marine site at the POLA and the Pier 1 site at the POLB. Site visits were conducted with the Ports' personnel. The two potential sites were screened based on availability, space, suitability for material handling, and proximity to potential disposal sites. The POLB Pier 1 site was originally determined to be the preferred site; an advantage included its proximity to the POLB Pier T fill site, where there was an on-going landfill project that was able to accept the treated sediment from the Pilot Study. As alternates to the Pier 1 site, Piers 2 (next to Pier 1) and 10 (on the Navy Mole) at the POLB were also identified as available and suitable as treatment sites for the Pilot Study.

These sites were later eliminated because of the decision to conduct the treatment on-land in constructed treatment cells instead of in-barge as initially planned. Since the revised treatment method requires constructing treatment cells in the ground, unpaved open land areas within the Ports were examined. The Anchorage Road site at the POLA was identified through consultation with the POLA and subsequently selected as the project site for the Pilot Study. Figure B2-1 shows the project site.

4.3.2 Source Sediment Selection

The following criteria were considered in selecting the source sediment for the Pilot Study:

- The selected sediment should possess physical and chemical characteristics that are representative of typical contaminated sediments from the Los Angeles County region.

- The selected sediment should contain sufficient fraction of fines with a sufficient level of contamination to ensure the significance of study results.

Dredged sediment data from prior studies indicated that the sediments from the inner harbor channels and berthing slips in Los Angeles/Long Beach Harbors tend to be appreciably finer and historically more contaminated than those from other dredging sites such as Marina del Rey and LARE. Therefore, the sediments from the inner harbors of the Ports were considered appropriate to use as source sediment for the Pilot Study.

The POLA maintains a temporary dredged material deposition and storage facility (holding basin) at the Anchorage Road site. The holding basin receives sediments dredged from various channels in the Los Angeles/Long Beach inner harbor. The typical storage age of the sediment in the basin was from days to weeks. Although portions of the sediment contained significant amount of uncommon organic debris such as fish scales, the majority was found to be typical of inner harbor sediments from the Ports. On this basis, the sediment was selected as the source sediment for use in the Pilot Study.

4.4 Work Plan

A Pilot Study Work Plan was developed to show proposed construction details and, sampling, testing and evaluation activities throughout the Pilot Study. The Work Plan was revised several times to reflect the Pilot Study's evolving status, scope, and direction. The various working drafts of the Work Plan were distributed to the CSTF for review and comment.

4.5 Permits and Approvals

Permits and approvals for the Cement Stabilization Pilot Study primarily consisted of those required for site use and construction activities. The right-of-access permit and other approvals related to project construction at the Anchorage Road site were obtained from the POLA prior to initiating site preparation.

5 PILOT STUDY DESIGN

This section discusses the design of the Pilot Study treatment process, treatment units, binder mixes, as well as the sampling and testing program.

5.1 Process Diagram and Units

The Pilot Study treatment process was developed as a land-based system with treatment activities taking place entirely on land. Figures B2-2 and B2-3 show the Pilot Study site layout and process diagram.

The treatment process was designed to simulate a full-scale dredged sediment Cement Stabilization project from raw sediment acquisition to final placement of treated sediment at a construction site. Major units of the process included a dredged material holding basin, treatment cells, stockpiling areas, and compaction pads.

5.1.1 Raw Material Holding Basin

A raw material holding basin is a critical process unit for buffering the difference in production rate between dredging operations and treatment operations. A holding basin holds raw dredged sediment delivered by barges or haul trucks until treatment units are ready to receive sediments for treatment. A holding basin is needed because it is often difficult to schedule dredging activities to synchronize with treatment activities. The holding basin provides a scheduling buffer to account for variability in dredging production rates.

5.1.2 Treatment Cells

Treatment cells for a Cement Stabilization project are generally vessels or confined areas within which the raw sediment is preprocessed, blended with binders, and cured for a prescribed initial curing period, before being transferred to the next processing unit. The treatment cells can be barges for an in-barge treatment system, or constructed confinements for a land-based system.

The treatment facility for the Pilot Study consisted of four rectangular treatment cells with trapezoidal cross sections excavated in the ground at the Anchorage Road site. Figure B2-4 shows the plan and cross sections of a representative cell.

The preliminary design called for a 2.7 meter cell depth to achieve the required capacity for each cell. It was recognized, however, that the bottom of an excvated 2.7 meter cell may be below the groundwater table at the project site. Hence, instead of excavating to 2.7 m below existing ground, an approximately 1.2 meter berm was constructed to surround an approximate 1.5 meter deep pit in the ground to prevent groundwater intrusion.

The cells were not lined; however, lining of the cells may be necessary if the treatment site was located at an inland area with fresh groundwater resources and/or if dissolved contaminants in the dredged sediment pore water are of concern for local groundwater resources.

5.1.3 Stockpiling Areas

Stockpiling is a necessary stage in the treatment process to reconcile the competing needs for increasing in-cell treatment production rate and controlling moisture content for optimal compaction at the placement site.

The sediment treated with binders in a treatment cell is normally allowed to cure in-cell for approximately 12 to 24 hours to achieve sufficient firmness and workability for sediment handling equipment before being transferred out of the cell by excavation. This initial curing period, though necessary, impacts the production cycle of a cell. Maintaining initial curing period within the shortest permissible range is advantageous to maximizing overall production ratet. It is recognized that the sediment excavated out of a cell after initial curing is typically not conditioned at or near the required moisture content for direct placement and compaction at a destination site. Temporary stockpiling is therefore required to buffer the transition.

Stockpiling areas were prepared on-site to receive initial-cured sediments from the cells. The areas were not lined or bermed since no free water was expected for sediment after completing initial curing and no major rainfall event was anticipated for the period of stockpiling. However, the contractor had plastic cover stored on-site in case of rain.

5.1.4 Compaction Pads

Potential uses for the treated dredged sediments in the Los Angeles region include construction fill for Port terminal development projects, which periodically need large quantities of sediments. For these applications, placement and compaction of the treated sediment at the receiving construction site represents the final development stage. The treated sediment continues to cure after being compacted at the placement site, which further enhances strength and other engineering characteristics.

Compaction pads were prepared to simulate the actual construction sequence for application of the treated sediment as fill and to provide data on engineering characteristics of the treated sediment on compaction. The design considered adequate acreage to ensure equipment workability and consistent compaction over the entire pad, as well as accurate placement of layers in 150 to 200 mm (6 to 8 inch) lifts.

5.2 Equipment

The equipment was selected to allow easy scaling-up of operation sand costs to the Baseline Case. This requires using equipment that would be used in a full-scale project if possible. The small treatment volume involved in the Pilot Study is not reflected in the types of equipment used, but in the number of specific equipment being used.

Table B2-4 lists the primary equipment and accessories selected for the Pilot Study and their respective uses in the treatment and placement processes.

Table B2-4
Process Equipment

Equipment	Depth (m)	Weight (ton)	Size (m)			Capacity	Use
			height	length	width		
CAT 225 Excavator	7	25	3.2	9.9	3.4	-	In-cell debris removal. Sampling. Treated sediment excavation
Hitachi EX 400 Excavator	8.2	42	3.5	11.5	3.5	-	Mixing added water and binders with sediment in cell
CAT 980 Loader	-	28	3.9	8.7	3.1	-	Transfer of excavated treated sediment from cell. Compaction
CAT 963 Loader	-	20	3.3	6.4	2.5	-	Compaction
CAT 14G Motor Grader	-	22	3.4	10.7	2.8	-	Site grading (berms, grades and roads)
John Deere 650 Dozer	-	7	2.6	4.5	2.6	-	Cell construction (cell slope and bottom grading)
Rake Attachment	-	-	1.3			-	Debris removal (used with CAT 225 excavator)
WBR Mix Head	Proprietary						Binder/water mixing (used with Hitachi EX 400 excavator)
Cement Truck	-	36 (Loaded)	-			-	Delivery of Premixed cement slurry to site
Cement Slurry Chute	-	-	3.7 - 4.3			-	Introduction of binder from cement truck into cells
Water Truck	-	-	-			7.6 m^3	Transport of harbor seawater to site for in-cell water addition. Dust control
Suction Lift Pump with Sediment Screen	-	-	-			1.5 kilowatts	Introduction of water from water truck into cells
Hydraulic Tractor Disc	-	-	0.9			-	Disking layers on compaction pads
Dual Slope Boards	-	-	-			-	Cell slope and bottom grading (used with John Deere 650 dozer)
Tarped Containers	-	-	-			30.6 m^3	Debris storage and disposal

5.3 Binders and Mix Ratios

5.3.1 Binder Selection

Binder selection was kept consistent with the Bench Study binders. Portland cement conforming to ASTM C-150 Type II and fly ash conforming to ASTM C-618 Class F were selected as binders for both Bench and DMMP Pilot Studies. Fluidized bed ash was investigated in the Bench Study but not the DMMP Pilot Study.

Portland cement is one of the most widely used binders for stabilizing contaminated wastes because of its ease of acquisition, consistency in composition from manufacturing sources, relatively lower cost compared with those of other types of cement such as alumina cement, and well-studied characteristics such as setting, hardening and contaminant binding. Portland cement's ability to fixate metals has generally been established both in the field and in the laboratory. The ability of the cement to reduce the mobility of other contaminants, however, has only been proven for certain constituents with special binder design (Sell et al., 1992). More general applicability of a cement-based process to organics has largely been uncertain and remains a subject of many studies.

Portland cement is categorized into eight types according to the American Society for Testing and Materials (ASTM, 2000j). The basic and least expensive Portland cement is Type I. All other types contain composition variations to improve certain aspects in setting, hardening and/or the end product. The ASTM Type II was selected for the Bench/Pilot Studies for its improved properties including a moderate rate of heat evolution from hydration compared with Type I. Although a moderate heat development generally corresponds to a moderate setting rate, it prevents potential excessive rate of temperature rise, especially when large process volumes are involved, that may adversely affect the properties of the end product (Conner, 1990).

Fly ash is often used in combination with cement for pozzolanic reactions to reduce binder cost while maintaining and, in some cases, improving treatment results. Fly ash generally relies on products from the hydration of Portland cement, primarily calcium hydroxide, to trigger pozzolanic reactions, produce cementing characteristics, and harden on curing (Clendenning et al., 1975). With appropriate

proportioning with Portland cement, cement and fly ash-treated products can increase strength characteristics and change other properties when compared to products treated with Portland cement only. Since fly ash is typically much less expensive than Portland cement, it has been used in combination with cement when applicable.

Fly ash composition consistency can be achieved by using one of the two grades (Classes F and C) specified in ASTM C 618 (ASTM 2000k). The ASTM Class F was selected for use in the Bench and DMMP Pilot Studies.

5.3.2 Mix Ratio Selection

The mix ratio refers to the ratio of binder(s) to raw sediment in percentage by weight on a dry or wet weight basis. The mix ratios and binder combinations for the Pilot Study were selected based on the following considerations:

- The dredged sediments in the Los Angeles region are typically mildly contaminated. Relatively moderate mix ratios should be sufficient to achieve adequate binding of contaminants.
- One of the more probable beneficial uses of the treated sediment in the region is as construction fill for port development projects at the POLA and POLB. For this application, enhancement of engineering properties of the dredged sediment is equally as important as immobilization of contaminants.
- A lower bound in the range of mix ratios that are effective in treating the dredged sediments in the region needs to be estimated in order to determine the lowest possible cost of Cement Stabilization as a long-term contaminated sediment management option.
- The performance changes in engineering and leachate characteristics of the treated sediment versus the changes in Portland cement and cement/fly ash mix ratios need to be examined within the range of mix ratios appropriate for the dredged sediment from the region. The effects of fly ash content should be isolated from those of Portland cement so that influences from both can be identified.

Initial observations in the Bench Study indicated that the dredged sediment mixture set relatively promptly even at low binder contents. This corroborated the estimation

that moderate binder mix ratios could be used. A range of relatively low binder-sediment mix ratios was therefore selected to investigate the efficacy of the technology in rendering contaminated dredged sediment beneficially usable in an economical manner, and to provide a baseline database on which designs of future full-scale projects can be based. The binder contents were designed such that individual binder effects on the treated sediment characteristics could be identified and analyzed. Table B2-5 shows the mix ratios selected for the Pilot Study.

Table B2-5
Design Mix Ratios

Cell[1]	Binder Mix Ratio	
	Portland Cement (Type II) (% wet weight)	Fly Ash (Class F) (% wet weight)
1	4	0
2	2	2
4	2	4
3	6	0

[1] Cell sequence is modified herein and hereafter for ease in results comparison as function of increasing mix ratios

Depending on operations control during processing, the actual mix ratios achieved in the field can be different from the design values. For the present study, a mix ratio of 1.5 percent Portland cement was actually executed for Cell 1 as a result of mechanical difficulties encountered at the initial stages of the field work. The actual executed mix ratios for other cells were only slightly different from the design ratios. The actual measured field ratios are reported in Section 6 and used in tabulating laboratory test results.

5.4 Sampling and Testing Program

The sampling and testing program was developed to provide an adequate database to evaluate the Pilot Study performance. Specifically, the program was designed to achieve the following objectives:

- Quantify treatment effectiveness.
- Document operational conditions as correlated with treatment effectiveness.
- Record waste stream characteristics and determine disposal needs.
- Develop a field database for potential future use in full-scale projects .

The Pilot Study sampling and testing program was developed to focus primarily on the following:

- Geotechnical characteristics of the treated, 28-day cured sediment.
- Chemical leachate reduction between the raw and the treated, 28-day cured sediment.
- Intermediate samplings were included to provide additional information related to sediment handling for freshly stabilized sediment and development of strength during later stages of curing.

5.4.1 Sampling

The sampling scheme for the Pilot Study was designed to accomplish the objectives of the sampling/testing program within a focused framework as discussed previously. The sampling locations, frequencies and methods were designed to provide adequate samples of raw sediment, initial cured sediment, 7-day and 28-day cured sediments, binders, binder slurry water, and raw sediment slurry water.

Since the source sediment was dryer than typical freshly dredged sediment, additional water was added to slurry the sediment for subsequent treatment. Residual water and residual solids typically generated from excess water removed from freshly dredged sediment would not be present for this project. The sampling program is summarized in Table B2-6.

Table B2-6
Sampling Matrix

Matrix	Location	Number of Samples	Method	Quantity	
				Geotech	Chemical
Raw Sediment	Treatment Cells	1 composite per cell	Take one deep grab at each of four locations across cell. Blend four grabs by mixer to produce a composite sample	0.019 m^3 per cell	0.001 m^3 per cell
Initial-Cured Sediment	Treatment Cells	1 composite per cell	Construct a trench at each of four locations across cell. Scrape each trench depth-wise to collect a grab. Blend four grabs mechanically to produce a composite sample	0.019 m^3 per cell	0.001 m^3 per cell
7-Day-Cured Sediment	Compaction Pads	2 per pad	Boring		
28-Day-Cured Sediment	Compaction Pads	2 per pad	Boring		
Binder: Portland Cement Type II	Suppliers	1	Supplier provided	9 kilograms (kg)	
Binder: Fly Ash Class F	Supplier	1	Supplier provided	9 kg	
Binder Slurry Water (Fresh Water)	Supplier Batch Plants	1 per batch plant	Grabs	-	0.001 m^3 per sample
Raw Sediment Slurry Water (Seawater)	Water Trucks	1 composite	Take one grab from each of four truckloads (one per cell). Combine the four grabs to produce a composite sample	-	0.001 m^3

5.4.2 Testing

The laboratory testing series was designed to accomplish the sampling/testing program objectives. The tests provided data specific to the primary focus of the program (i.e., the geotechnical characteristics of the treated, 28-day cured sediment, and the chemical leachate reduction between the raw and the treated, 28-day cured sediment). Specific tests on other samples from various stages of the treatment process were also included to provide additional characterization of the following:

- Bulk chemistry of the raw sediment.
- Properties related to workability of freshly stabilized sediment.
- Development of hardened mechanical properties during later stages of curing.
- Quality of process waters (binder slurry water and raw sediment effluent).

The testing methods, particularly the leaching methods, were based on the specific study purposes and goals. Since the primary potential beneficial use envisioned for the treated sediment is construction fill, the Synthetic Precipitation Leaching Procedure (SPLP) (EPA, 1994) provides an appropriate method for evaluating contaminant leaching from the treated sediment. The SPLP was designed to evaluate sediments placed at sites other than hazardous waste landfills and subjected to environmental stresses normally encountered at an open site. For purposes of this study, the SPLP was chosen to evaluate contaminant leaching potential under the most probable conditions the treated sediment may experience when placed for beneficial use.

To provide the upper limits of contaminant leaching potential for the envisioned beneficial use of the treated sediment, the more aggressive Waste Extraction Test (WET) (CCR, 1984) was selected to supplement the SPLP. Developed for determining disposal requirements for hazardous materials in California, the WET is more conservative than the SPLP in terms of assessing leaching potential. The WET is often conducted in combination with the Toxicity Characteristics Leach Procedure (TCLP), a Federal method for screening hazardous materials, for a complete evaluation of leaching characteristics. For purposes of this study, the WET was used in combination with the SPLP to bracket the contaminant leaching potential under a wide range of environmental stresses the treated sediment may experience when placed for beneficial use.

Chloride leaching is a major concern for regulatory agencies due to its potential impacts on freshwater aquifers if disposed at an upland location. The potential extent of chloride leaching from treated sediment when placed upland for beneficial use needs to be evaluated. Therefore, in addition to the SPLP and WET, the Monolithic Leaching Test (MLT) procedure was selected for evaluating sodium chloride (NaCl) leaching from the raw sediment and the 28-day cured sediment.

A monolithic leach procedure, which evaluates leaching from a specimen in a monolithic form rather than granular form, was selected in the Pilot Study for its relevance to the geotechnical conditions under which the treated sediment would be

applied for beneficial uses. The MLT is a modified version of the ANS 16.1 procedure (ANS, 1986) that evaluates leaching from a monolithic specimen by sequential batch leaching. The MLT retains the concept and core procedure of the ANS 16.1 but leaves out details pertaining to nuclear waste handling. Laboratory procedure details are discussed in Attachment A, Operations and Laboratory Analyses Summary Report. Sodium chloride was chosen as the target contaminant for the MLT for its abundance in seawater as well as its high solubility and mobility in soil when subject to leaching events such as rainfall.

Table B2-7 shows the testing matrix for each cell.

Table B2-7
Testing Matrix

Matrix	Chemical Tests					Geotechnical Tests									
	Bulk Chemistry[1]	Leach: SPLP[2]	Leach: WET[3]	Leach: MLT[4]	Water Chemistry[5]	Atterberg Limits[6]	Grain Size[7]	Soil Classification[8]	Moisture Content[9]	Compaction[10]	Unconfined Compressive Strength[11]	Direct Shear[12]	Consolidation[13]	Permeability[14]	R-Value[15]
Raw Material	●	●	●	●			●	●	●	●					
Initial-Cured Material						●	●	●	●	●					
7-Day-Cured Material											●	●			
28-Day-Cured Material		●	●	●		●	●	●	●		●	●	●	●	●
Binder Slurry Water (Fresh Water)					●										
Raw Material Additional Water (Seawater)					●										

1. EPA standard methods (See Attachment C for detailed methods)
2. EPA Method 1312 (EPA, 1994)
3. Title 22 California Code of Regulations (CCR, 1984)
4. Monolithic Leach Test on sodium chloride. Modified from ANS 16.1 (ANS, 1986)
5. EPA standard methods (See Attachment C for detailed methods)
6. ASTM D4318 (ASTM, 2000a)
7. ASTM D422 (ASTM, 2000b)
8. ASTM D2487 (ASTM, 2000c)
9. ASTM D2216 (ASTM, 2000d)
10. ASTM D1557 (ASTM, 2000i)
11. ASTM D2166 (ASTM, 2000e)
12. ASTM D3080 (ASTM, 2000f)
13. ASTM D2435 (ASTM, 2000g)
14. ASTM D5084 (ASTM, 2000h)
15. CTM 301 (CTM, 2000)

6 TREATMENT ACTIVITIES

This section discusses field construction activities performed during the Pilot Study.

6.1 Equipment Mobilization

Equipment priorities and requirements were established before activities commenced within the project boundaries. Due to project site space constraints the equipment was mobilized as necessary for each task. Table B2-8 shows the mobilization and demobilization activities and transport equipment used.

Table B2-8
Mobilization and Demobilization

Item	Mobilization Equipment
CAT 225 Excavator	Heavy Load Low Bed
Hitachi EX 400 with WBR Mixing Attachment	Heavy Load Low Bed
John Deere 650 Dozer	Low Bed
CAT 14G Motor Grader	Low Bed
CAT 963 Track Loader	Low Bed
CAT 980 Wheel Loader	Heavy Load Low Bed
Water Truck	Low Bed
Site Office Trailer	Delivered by Vendor
Tractor Disc	Low Bed

In addition to the construction equipment, a 30.6 m^3 storage container for storage of personal protection equipment and two 32 m^3 tarped containers for debris disposal were delivered to the site using a 12 meter roll-off truck.

6.2 Site Preparation

The site layout was constructed to accommodate four separate treatment cells. The cells were sloped 1:1.5 on all four sides and sediment excavated from the cells was used to raise the grade of the cell side areas to create a 2.7 meter cell depth. A CAT 980 wheel loader was utilized to excavate the cells, lay the excavated sediment out in 300 mm lifts, and compact the berm to grade adjacent to the cells. After the CAT 980 excavated the cells, a John Deere 650 track dozer equipped with dual slope boards finished the sides and bottoms of the cells. Photo B2-1 shows a treatment cell under construction.

Photo B2-1. Treatment Cell under Construction

Photo B2-2. Completed and Secured Cell

After completing the cells, the entire area was secured with orange safety fence and caution tape to prevent any unintended access to the area. Safety signs, as required by the USACE, were placed around the area and in two additional conspicuous places to inform visitors that entrance to the area required personal protective equipment. Photo B2-2 shows a completed and secured treatment cell.

Prior to placing sediment into the cells, the contractors surveyed the cells and each cell's capacity was recorded as identified in Table B2-9.

Table B2-9
Treatment Cell Holding Capacities

Cell	Holding Capacity (m^3)
1	500
2	488
3	444
4	419

Total capacity of the cells is approximately 1,850 m^3, which was fully utilized in the project. The area around each cell was compacted and graded, and roads cut or graded utilizing a CAT 14G motor grader. A 500 mm soil berm was also constructed around the entire site to divert potential runoff in case of any unforeseen rainfall event.

Sediment samples of the cell sidewalls and bottoms were taken and archived in case of any unknown local contamination that might interfere with project analytical data. The

cell wall samples were retained under refrigeration at the WBR laboratory in Newport Beach, CA.

6.3 Raw Material Acquisition and Preparation

Photo B2-3. POLA Anchorage Road Dredged Material Holding Basin

Photo B2-4. Dredged Material Placement into Treatment Cell

The raw dredged sediment was obtained from the POLA Anchorage Road material holding basin using excavation equipment. Photo B2-3 shows the holding basin. The sediment was excavated from two areas on the back-side of the basin where there is less debris than the front dumping areas. The excavated sediment was loaded into trucks and delivered and unloaded into the treatment cells. Photo B2-4 shows a dump truck ready to unload the dredged sediment into a treatment cell.

6.4 Preprocessing

Prior to mixing in the binders, debris was removed from the sediments in each of the cells. A CAT 225 excavator equipped a special fabricated rake attachment was used for debris removal. The debris removal process was conducted in a methodical manner, from end to end and top to bottom in each cell. The typical debris found in most harbors was well represented in the sediment from the holding basin. These included rope, wire cables, pipe, timbers, rock, metallic assemblies (gear drives, pulleys, etc.), long steel rods and a variety of non-descript items. Photos B2-5 and B2-6 show the debris removal operation and typical debris removed, respectively.

Photos B2-5A. Debris Removal

Photo B2-5B. Debris Removal

Photo B2-6. Removed Debris

Photo B2-7. Debris Disposal

Extreme care was taken during the debris removal process not to impact the cell wall with the tines of the WBR rake attachment. The same care would be necessary for debris removal from a barge or metal walled treatment cell, so as not to damage the sidewalls or bottom of the treatment cell. As the debris was raked from the cells, it was removed from the rake by an on-site technician. After all the debris had been removed and stockpiled, the sediment was collected and loaded into a 32 m^3 roll-off container and transported to the ECDC industrial landfill located in East Carbon, Utah. Photo B2-7 shows debris being loaded into a container for subsequent disposal.

6.5 Treatment

6.5.1 Mixing Head

The treatment process employed a blending assembly consisting of a specially engineered mixing head attached to an excavator equipped with a separate variable hydraulic power system. The mixing head attachment was developed by WBR for use in blending stabilizing binders with dredged sediments, sludge and any other type of contaminated slurry. The WBR mixing head blends binders by propelling the viscous sediment and binder mixture vertically, top to bottom, to achieve thorough mixing of sediments with the binders introduced. The WBR mixing head was designed to operate between 0 to 300 revolutions per minute (rpm) and can move in both vertical and horizontal directions throughout a blending

cell. The WBR mixing head generates turbulent action to redistribute sediments within a blending cell in a manner that promotes consistent, uniform blending of the binders and dredged sediment. Photo B2-8 shows the mixing assembly and mixing head.

Photo B2-8. Mixing Assembly and Mixing Head

6.5.2 Seawater Addition

To create an "as dredged" condition for the previously dredged sediment from the holding basin, approximately 38 m^3 of seawater was added to each cell from nearby POLA Consolidated Slip. The mixture was then blended with the WBR mixing head to suspend the solids prior to binder introduction. Photo B2-9 shows the water addition operation.

6.5.3 Binder Addition

Dry cement binder addition was first attempted for Cell 1. A dry cement delivery hose was strung along the EX 400 boom and extended to connect with a dry cement truck trailer equipped with a blower. The WBR mixing head was modified to include a dry cement discharge port within the dome of the housing for directly injecting dry cement. The mixing head was engineered so that the binder and sediments would be forced down, carrying the dry cement binder into the body of sediments.

The cement was injected dry at rates of approximately 136 to 227 kg per minute from a self-contained truck-mounted pneumatic delivery system. The WBR mixing head received the dry sediment directly through a 100 mm hose to a discharge mounted on the top of the mixing head's frame, to the side of the parabolic dome. This method produced small amounts of airborne particulate that was not acceptable for the project location. An immediate on-site modification was made to the dry cement injection system. A 10 cm in diameter, 1.2 meter long steel tube was attached to the

steel support of the protective shroud and a 90 degree fitting added to direct the discharge of the dry binders directly into the turbidity created by the rotating blades. Although this design change decreased the airborne particulate by approximately 50 percent, the amount of airborne particulate was still considered excessive.

Photo B2-9. Water Addition and Blending

The project management team and USACE representatives made the decision to discontinue the pneumatic injection method and switch to an aqueous-based slurry method of binder introduction.

Constant blending of the dry injected binders continued until the aqueous slurry binders arrived and was introduced into Cell 1. The blending process continued until Cell 1 was completely blended with the new slurry addition. The mixing unit modifications and changes from dry cement to slurry cement significantly increased the blending time for Cell 1. A total of 8 hours was required to blend with the WBR mixer. Following review of truck weight tickets, it was determined that approximately 1.6 percent cement binder was blended into the contaminated sediments within Cell 1.

Photo B2-10. Water Addition and Blending

Pre-mixed binder slurry use was determined to be appropriate for the remaining cells. The cement and cement/fly ash aqueous slurry formulas were mixed at A&A Ready Mixed Concrete, Inc. and Standard Concrete Products, Inc. batch plants located in the vicinity of the project area and delivered to the site via conventional cement truck. The trucks arrived in consecutive loads as ordered for all three remaining cells. Prior to slurry discharge from the truck, the mixture payload was visually checked for the desired consistency. The pre-mixed slurries were added to the cells at the surface and at a rate that allowed thorough blending by the mixing head. Photo B2-10 shows the pre-mixed binder introduction operation.

All binder addition percentages were calculated and expressed as dry binder tons added per wet sediment tons. Table B2-10 shows the actual binder mix ratios achieved in the field.

Table B2-10
Mix Ratios Achieved in Field

Cell	Binder Mix Ratio	
	Portland Cement (Type II) (% wet weight)	Fly Ash (Class F) (% wet weight)
1	1.5	0
2	1.9	1.9
4	1.9	3.8
3	5.7	0

6.5.4 Blending

Dredged sediment blending with the binders started as the binders were introduced into the cells. The binder slurries were discharged from the truck chute adjacent to the mixing head. This allowed for immediate blending of the slurry and sediments and prevented settling or clumping. A WBR project management team member was in position to observe and monitor the operations throughout the blending processes. The blending unit worked successive areas within a cell as it moved along the side of the cell. Since an immediate increase in the blended sediment viscosity was expected, blending progressed relatively rapidly across the cell. The time required to blend a cell was typically 2.5 to 3.5 hours. Photos B2-11 and B2-12 show the blending process and freshly blended sediment, respectively.

Once the pre-determined binder quantities had been completely added and blended within the cells, the blended sediments were allowed to cure. Depending on binder mix ratios, approximately 8 hours of curing time was needed at a minimum before the treated sediment could be excavated. Within 12 hours after binder addition, the material was found to be firm enough to support a person standing on the cell surface. The required initial curing period was determined to be approximately 8 to 12 hours before further material handling or transfer could be executed. Photo B2-13 shows the initially cured material. Photo B2-14 shows the firmness of the initially cured material.

Photo B2-11. Blending

Photo B2-13. Material after Initial Curing

Photo B2-12. Freshly Blended Material

Photo B2-14. Firmness of Initially Cured Material

6.6 Stockpiling

After the 8 to 12 hour initial curing period, the treated materials were excavated and stockpiled. A CAT 225 excavator equipped with a one meter bucket was used to remove the treated sediments from the cells. Care was exercised to avoid excavating the cell wall material during excavation. Photo B2-15 shows the excavation of initially cured material from a treatment cell.

Photo B2-15. Excavation and Transfer of Treated Material for Stockpiling

A CAT 980 wheel loader was used to transfer the excavated treated materials to designated stockpiling areas adjacent to areas designated for the compaction pads. Signs showing cell numbers from which the stockpiled materials were excavated were posted on the stockpiles for identification. Photo B2-16 shows a stockpile of treated material.

Photo B2-16. Stockpiling

6.7 Compaction Pad Placement

Four compaction pad areas were laid out to accommodate treated materials from the four treatment cells. Each pad was approximately 11 m wide by 23 m long and delineated by six grade stakes, three per side. Each grade stake was clearly marked with color-coded grade tape to signify the height required: red at +300 mm, red and white at +600 mm and white at +900 mm. These elevations were shot from a benchmark at the center of each designated pad area.

Following sediment stockpiling completion, the first treated sediment lift was laid out within the designated compaction pad area. A CAT 980 loader was used to place the first lift at the opposite side of the corresponding stockpile. The stockpile material was carefully applied to the pad area to avoid mixing the first lift with the graded and compacted site soil. Photo B2-17 shows initial material lifts at a compaction pad.

Photo B2-17. Initial Lifts of Compaction Pad

After 1 to 4 days (depending on the degree of drying), the initial treated sediment lift was graded and back-dragged utilizing a CAT 963 track loader equipped with a 4-in-1 hydraulic actuated bucket. Once the initial lift was cured and dried, a second lift was applied using the same techniques and equipment. A CAT 963 equipped with a 900-mm tractor disc was used to blend and turn the sediments to expedite the air-drying process. Photo B2-18 shows a disked compaction layer.

Photo B2-18. Disked Compaction Layer

6.8 Compaction

The compaction equipment and method used for compacting the lifts were chosen to approximate a large-scale fill and compaction operation. Each pad was inspected daily. A pad-specific plan was formulated each morning defining techniques to maximize compaction. Depending upon the treated material moisture content, the pads were either compacted and an additional lift added or the pad was turned to maximize drying using a CAT 963 equipped with a tractor disc. The tractor and disc tilled the material in two directions: east to west and west to east. This tilling method simulated full-scale operations. The operator isolated the movement of the machine and disc to the surface of the pad, minimizing foreign material from being tracked onto the pad.

A CAT 980 was used for pad compaction. The CAT 980 is similar to a CAT 824 Static Compactor with a rubber tire configuration, but weighs approximately 2.7 tons less due to the 5.3 m^3 bucket loading configuration. The additional weight comes from the blade attachment that is standard on the CAT 824. The CAT 980 performed multiple tasks during Pilot Study operations, including pad compaction that gave similar results to a CAT 824-type compactor.

During compaction, the CAT 963 exposed, turned, or blended material to achieve the required compaction prior to adding the next lift. Additional machine weight was added as needed by loading approximately 2 m^3 of sediments (from the same stockpile) into the CAT 980 bucket. This provided a weight equal to the weight of a CAT 824. Photo B2-19 shows the compaction and disking operation.

Photo B2-19. Compaction and Disking

The practices discussed simulated common field operations for the compaction of material containing greater than optimum percentages of moisture. The compaction of each pad lift took approximately 10 to 15 minutes. Each lift was compacted prior to placing the next lift.

6.9 Treatment Cell Backfill

The vacated cells were backfilled after the treated sediments were excavated and stockpiled. This action provided a compaction pad lay-down area within the Project Site. The CAT 980 and CAT 963 performed the backfilling operations. Initially, the CAT 963 track loader pushed the sidewalls of the cell into the vacated cell area. The CAT 980 wheel loader moved additional material into the cell and compacted the backfill material. The two pieces of equipment worked in unison to complete backfill and compact each cell in less than five hours. A CAT 14G motor grader graded and leveled the former cell area and provide a clean finish grade.

6.10 Debris Disposal

Debris and operating wastes were placed into 30.6 m^3 tarped containers. A skip loader was used for loading the larger pieces of debris. Coveralls, rubber gloves, dust masks, and disposal sampling equipment were placed in the roll-off container. All materials in the containers were considered to be non-hazardous contaminated wastes to be disposed of in accordance with State and local regulations governing contaminated materials. The containers were transported via truck to the ECDC Intermodal Facility in Los Angeles, CA, and loaded onto a railroad flat-car. The containerized waste materials were then shipped via rail to the ECDC industrial landfill facility. A non-hazardous waste manifest document accompanied the container. This document is required when shipping any containerized waste material and contains all of the pertinent shipping information including a description waste material, site address, name of generator and estimated quantity. The ECDC landfill facility received the containers and unloaded the wastes. A completed, signed copy of the manifest was returned to the generator (USACE), which provided proof that the materials were received at the landfill and had been disposed properly in accordance with all State and local regulations.

6.11 Site Restoration

Following final sampling of the cured, compacted materials at the compaction pads, the treatment and sampling work were considered completed in accordance with the Pilot Study specifications. The USACE and the POLA decided to leave the four compacted pads in place for an undetermined amount of time. The stockpiled treated sediments that were not utilized within the compacted pads were relocated using the CAT 980 and placed inside the bermed perimeter of the dredged material holding basin.

Orange safety fence was re-positioned to enclose the four pads. The safety fence will aid in maintaining the integrity of the pads to allow for any additional sampling that may result from unforeseen Quality Assurance/Quality Control (QA/QC) concerns.

All other site equipment or engineering controls such as office trailer tie downs and signs were removed and affected areas restored to the conditions that existed at the site prior to the commencement of the Pilot Study.

6.12 Demobilization

Equipment was demobilized when it was no longer needed at the project site. The first step in this process was to decontaminate or clean any of the treated or untreated sediments left on the equipment at designated decontamination area directly adjacent to the dredged material holding basin.

The decontamination area was engineered to direct all the rinse water and the sediments back to the holding basin where the solids would settle and dewater. A 7.6 m^3 water truck equipped with a 51 mm hose and adjustable nozzle provided a high volume, high-pressure water rinse that effectively removed the sediments from the equipment. In addition to the water rinse, brushes, shovels and breaker bars were used to remove all sediments trapped or that adhered onto the equipment.

After the equipment was cleaned, it was staged at an area with sufficient access to accommodate low-bed truck and trailers for easy and safe loading. After the equipment was positioned for loading, a dry decontamination or cleaning procedure using brooms and brushes was performed to remove any dry soil or debris that may have accumulated during the repositioning of the equipment to the staging area.

6.13 Documentation

The field work was documented through logs, photos and videos. Details of the operations as documented are included in Attachment A, Operations and Laboratory Analyses Summary Report.

7 SAMPLING AND TESTING ACTIVITIES

This section describes activities that were conducted to fulfill the sampling and testing program according to the sampling and testing matrices presented in Section 5. Sample preparation procedures and equipment employed are discussed to provide detailed information on the field execution of the sampling and testing program.

7.1 Sampling

7.1.1 Raw Sediment

Four grab samples were taken as described in the sampling matrix. Following raw sediment delivery to the processing cell, a backhoe excavator equipped with a rock bucket and rake removed debris such as pilings, cable and trash. After the debris were removed and placed in a roll-off container, four grab samples of raw sediment were taken from each land barge processing cell.

A CAT 225 backhoe-type excavator equipped with a digging bucket was used to sample each cell. The excavator bucket was lowered to the bottom of the cell, slowly raised to the surface and the loaded bucket was placed adjacent to the cell for sampling. The samples were taken from the backhoe excavator bucket using a clean 19 liter (5 gallon) plastic bucket. The four grab samples were then combined in a clean 120 liter (32 gallon) cement mixer and blended. Following blending, samples were split out for laboratory processing.

The sample for geotechnical testing was placed in clean, 19 liter (5 gallon) plastic buckets fitted with a plastic lid, labeled and sent for geotechnical testing at Smith Emery GeoServices (SEG). The samples were sent to SEG at the following address:

Smith Emery GeoServices
791 East Washington Boulevard
Los Angeles, CA 90021
Attn: Raf Hutalla

The sample for chemical testing was placed in a 1 liter (0.26 gallon) glass jar with a screw-on plastic lid, labeled, placed inside a zip-lock type plastic bag, cooled to 1.7 to

5.6 degrees Celsius (35 to 42 degrees Fahrenheit), and delivered to ToxScan by overnight express freight in coolers with sealed ice blocks to maintain the required temperatures. The samples were sent to ToxScan at the following address:

ToxScan, Inc.
42 Hangar Way
Watsonville, CA 95076-2404
Attn: Phil Carpenter

All samples were labeled with the following information:

- Sample number.
- Project designation.
- Sample location.
- Sampling date and clock time.
- Brief sample description.

7.1.2 Initial-Cured Sediment

Approximately 12 to 24 hours following introduction of binders and mixing with the raw sediment in the treatment cell, a composite sample of stabilized sediments was taken.

The CAT 225 excavator equipped with a digging bucket was used to sample at four locations within each cell. A trench was dug to the bottom of the cell. The excavator bucket was then used to scrape the trench wall from the bottom to the top, filling the bucket. A small shovel was used to obtain a 19 liter (5 gallon) plastic bucket sample at each sampling location. The four cell sample buckets were then combined on a clean 3 m x 3 m plastic tarp and blended with a shovel using the cone-and-quarter method. Following blending, the cone was flattened and a shovel was used to obtain the final 19 liter geotechnical sample from the blended material. The 19 liter sample was placed in a clean plastic bucket, fitted with a plastic lid, labeled and sent to SEG for geotechnical testing.

A 1 liter (0.26 gallon) sample was taken from the blended sediment on the plastic tarp using a clean spatula. The sample was placed in a clean glass jar with a secure plastic

screw lid, labeled, cooled to 1.7 to 5.6 degrees Celsius (35 to 42 degrees Fahrenheit), then forwarded to ToxScan for chemical testing.

7.1.3 7-Day-Cured Sediment

SEG field technicians collected core samples from the compaction pads after seven days of curing. A split-tube coring unit was used and was driven by hand. Two cores were taken at different locations (i.e., East and West) on each of the four compaction pads. SEG retained portions of the cores for geotechnical properties and delivered the remaining portions of the cores to ToxScan for chemical analysis.

7.1.4 28-Day-Cured Sediment

SEG used the same procedure and method to obtain the 28-day cured sample cores from the compaction pads after 28-days of curing. The two coring areas (i.e., East and West) of each pad were also evaluated for field density.

7.1.5 Process Water

Process water samples were collected from the following:

- Seawater added to the treatment cells.
- Fresh water used in creating binder slurry.

Seawater was added to the raw sediment in the treatment cells to produce slurry with similar moisture content as an "as-dredged" sediment. Seawater was pumped from the POLA Consolidated Slip channel area and transported to the processing area using a 7,600 liter (2,000 gallon) water truck. As the seawater was discharging into the processing cell, a 1 liter (0.26 gallon) sample was taken from each truckload. The samples were then combined in a 19 liter plastic bucket to provide a seawater composite sample. A 1 liter sample of the seawater was retained in a glass jar and refrigerated.

Batch plant process water samples were taken in 1 liter (0.26 gallon) glass jars from the two cement slurry and cement/fly ash slurry suppliers. The seawater and batch plant process water samples were cooled and shipped to ToxScan for testing.

7.1.6 Binder

Three 9 kg samples of Type II Portland cement and one 9 kg sample of Class F coal fly ash were collected, respectively, from the three cement suppliers and the fly ash supplier. The samples were sent to the following address for potential future reference:

U.S. Army Corps of Engineers
Baseyard Soil Laboratory
North Durfee Avenue
South El Monte, CA 91733-4399
Attn: Art Moncayo

7.2 Testing

Testing was conducted at contractor laboratories to fulfill the testing program requirements according to the test matrix presented in Section 5. ToxScan performed chemical testing, while SEG performed geotechnical testing. Detailed procedures and methods employed for the series of chemical and geotechnical tests performed are contained in the Attachments.

7.3 Quality Assurance And Quality Control

SEG and ToxScan maintain industry standard quality assurance and control programs and implemented those programs in the analysis of project materials. The QA/QC programs of SEG and ToxScan are included in the Attachments.

8 LABORATORY RESULTS

This section presents laboratory testing results for geotechnical properties, raw sediment chemistry, process water chemistry, and chemical leach characteristics of the pre- and post-treated sediment. The results are summarized, analyzed and discussed in terms of the four progressively increased binder contents in the treated sediment and, for each binder content level, the change of properties over the treatment period.

8.1 Geotechnical Characteristics

8.1.1 Grain Size

Grain sizes were determined for the raw, initial-cured, and 28-day cured materials. Complete percent-passing curves are given in Attachment B—Laboratory Geotechnical Analyses. Table B2-11 summarizes the results.

Table B2-11
Grain Size

Cell	Binder	Material	Gravel (%)	Sand (%)	Silt (%)	Clay (%)	D_{30} (mm)	D_{50} (mm)	D_{60} (mm)	D_{85} (mm)
1	1.5% Cement	Raw	0	52.3	20.5	27.2	0.0095	0.083	0.107	0.202
		InitiaCured	0	46.1	28.9	25.0	0.0133	0.063	0.095	0.216
		28-Day	4.6	47.1	20.8	27.5	0.0064	0.082	0.108	0.237
2	1.9% Cement 1.9% Fly Ash	Raw	0	52.6	21.3	26.1	0.0077	0.084	0.109	0.219
		Initial-Cured	0	48.2	30.7	21.1	0.0269	0.071	0.104	0.343
		28-Day	3.0	44.7	26.0	26.3	0.0079	0.064	0.099	0.219
4	1.9% Cement 3.8% Fly Ash	Raw	0	42.2	32.4	25.4	0.0085	0.050	0.084	0.241
		Initial-Cured	0	48.8	29.8	21.4	0.0271	0.073	0.094	0.250
		28-Day	2.3	48.0	19.0	30.7	0.0044	0.076	0.104	0.209
3	5.7% Cement	Raw	0	53.8	19.8	26.4	0.0083	0.088	0.111	0.208
		Initial-Cured	0	54.4	23.2	22.4	0.0259	0.094	0.152	0.456
		28-Day	1.1	48.8	32.1	18.0	0.0365	0.075	0.095	0.219

Comparison of the results between the raw and initial-cured materials indicates that except for Cell 1, there is a consistent trend of coarsening of the material after treatment. This trend was observed to be more robust with increasing binder contents for Cells 4 and 3, where all characteristic grain sizes increase after treatment. This characteristic becomes less apparent with decreasing binder content as shown in

the results of Cells 2 and 1. The binder contents in Cells 1 and 2 are probably too low to provide a consistent trend. The variability in physical parameters among test samples also tends to obscure the results when binder content is low.

Comparison of the results between the raw and initial-cured materials also indicates that there is a consistent reduction in fines content of the material after treatment for all binder content levels. The percent reduction in fines content ranges from 8 to 19 cent. The reduction in clay content reflects the result of cementing action of the binder hydration products that binds the clayey particles into larger grains.

Twenty-eight day cured material results show the creation of a gravel fraction in each of the sample groups. This may partly be the result of compaction that was performed on the materials before they were cured. The materials underwent much of the curing process in a compacted state at the compaction pads. The continued development of the structural properties of the materials under compaction may have contributed to the production of the coarser gradation. Potential variability in the execution of laboratory sample preparation procedure, which requires breaking up of sample aggregations in a mortar, may also have a role in the gravel percentage recorded.

8.1.2 Atterberg Limits and Soil Classification

Atterberg limits were determined for the initial-cured and 28-day cured materials. These limits were employed to determine the soil classes of the sediment. Table B2-12 summarizes the results.

Table B2-12
Atterberg Limits

Cell	Binder	Material	Liquid Limit (%)	Plastic Limit (%)	Plasticity Index (%)	Classification
1	1.5% Cement	Initial-Cured	38	27	11	ML[1]
		28-Day	33	23	10	ML
2	1.9% Cement 1.9% Fly Ash	Initial-Cured	35	25	10	ML
		28-Day	37	27	10	ML
4	1.9% Cement 3.8% Fly Ash	Initial-Cured	38	27	11	ML
		28-Day	46	30	16	ML
3	5.7% Cement	Initial-Cured	41	31	10	ML
		28-Day	54	41	13	MH[2]

1 Sandy silt (inorganic silts, very fine sands, rock flour, silty or clayey fine sands)
2 Sandy elastic silt (inorganic silts, micaceous or diatomaceous fine sands or silts, elastic silts)

The results indicate that the liquid limits and plastic limits of the 28-day cured material consistently increase with increasing binder content. The plasticity index of the 28-day cured material also tends to be higher for higher binder contents. In addition, the results indicate that the liquid and plastic limits tend to increase during the course of curing for materials treated with higher binder contents. The results of soil classification show that the treated material is typically sandy silt. The plasticity index of the material, however, appears to increase with increasing binder content.

8.1.3 Moisture Content

Moisture contents were determined for the raw, initial-cured, and 28-day cured materials. The test results are summarized in Table B2-13.

Table B2-13
Moisture Content

Cell	Binder	Raw (%)	Initial-Cured (%)	28-Day-Cured (%)	Typical Initial[1] Drying Rate (%/day)[2]	Average Subsequent Drying Rate (%/day)
1	1.5% Cement	48.0	47.2	26.8	2.2	1.6
2	1.9% Cement 1.9% Fly Ash	45.8	43.9	34.1	5.5	0.8
4	1.9% Cement 3.8% Fly Ash	43.6[3]	47.3[3]	24.3	-[3]	-
3	5.7% Cement	47.6	46.4	32.6	3.4	1.1
				Average	3.7	1.2

[1] Within the first 12 to 24 hours (average 18 hours) from binder introduction
[2] Percent reduction from initial moisture
[3] See discussion

The results indicate that, except for Cell 4, the treated material achieved an average of approximately 3.7 percent reduction in moisture content during the first 12 to 24 hours after binder introduction, and 32 percent over the next 27 days. The moisture reduction rate is approximately 3.7 percent per day or higher at the start of curing, and slows down as curing progresses toward completion. This characteristic apparently correlates with the well-established setting process characteristics for cement stabilized material, augmented by air-drying during stockpiling and handling operations.

The anomaly of Cell 4 data may have resulted from the difference in spatial distributions of water content within the cell before and after blending. Complete spatial homogeneity is difficult to achieve in the field. Compositing spatial samples may help eliminate some of the non-homogeneous effects and produce representative samples. However, it is difficult to achieve sample consistency if spatial variation is significant.

8.1.4 Compaction

Compaction characteristics, including maximum dry density and optimum moisture content, were determined for the raw and initial-cured materials. Complete

compaction curves are attached in Attachment B—Laboratory Geotechnical Analyses. Table B2-14 summarizes the key results.

Table B2-14
Compaction Characteristics

Cell	Binder	Material	Optimum Moisture Content (%)	Maximum Dry Density (ton/m^3)	Change in Treated Material from Raw Material (%)	
					Optimum Moisture Content	Maximum Dry Density
1	1.5% Cement	Raw	13.8	1.83	+26.1	-8.7
		Initial-Cured	17.4	1.67		
2	1.9% Cement 1.9% Fly Ash	Raw	12.4	1.86	+15.3	-1.8
		Initial-Cured	14.3	1.82		
4	1.9% Cement 3.8% Fly Ash	Raw	12.9	1.84	+41.1	-11.5
		Initial-Cured	18.2	1.63		
3	5.7% Cement	Raw	12.6	1.88	+77.0	-16.4
		Initial-Cured	22.3	1.57		
				Average	+39.9	-9.6

As shown in Table B2-14, there is an increase of optimum moisture content and decrease of maximum dry density as a result of treatment. The average decrease in maximum dry density is approximately 9.6 percent with a corresponding average increase in optimum moisture content of approximately 39.9 percent. The extents of changes in optimum moisture content and maximum dry density before and after treatment appear to correlate with the corresponding Atterberg limits in the initial-cured material. The results suggest a greater reduction in compaction performance for a more plastic material. The typical ranges of optimum moisture content and maximum dry density for soils are approximately 5 percent (granular material) to 35 percent (elastic silts-clays), and 1.0 ton/m^3 (elastic silts-clays) to 2.3 ton/m^3 (granular material), respectively (Liu & Evett, 1998). The present results indicate that the initial-cured material is a mid-range product in terms of compaction characteristics.

It should be noted that the compaction characteristics were evaluated for the freshly stabilized sediment for determining operations requirements for transferring material to a receiver fill site and compaction. The freshly stabilized sediment continues to

cure over the next few weeks, during which time, properties of the material appreciably improve. The results of compaction characteristics of freshly stabilized sediment, do not generally represent those of the final, completely cured material.

8.1.5 Unconfined Compressive Strength

Unconfined compressive strength (UCS) was evaluated for the 7-day and 28-day cured materials. The test results are summarized in Table B2-15

Table B2-15
Compressive Strength

Cell	Binder	Material	UCS (ton/m^2)	Rate of Strength Development (ton/m^2/day)	% Final Strength[1] Developed
1	1.5% Cement	7-Day	4.5	0.52	71.0
		28-Day	15.4		
2	1.9% Cement, 1.9% Fly Ash	7-Day	6.8	0.48	60.0
		28-Day	17.0		
4	1.9% Cement, 3.8% Fly Ash	7-Day	7.1	1.23	78.6
		28-Day	33.0		
3	5.7% Cement	7-Day	13.2	2.11	77.1
		28-Day	57.5		
			Average	1.09	71.6

[1] Assuming curing largely completed in 28-days.

The results indicate that the UCS increases consistently with increasing binder content for both 7-day and 28-day cured materials. The rate of strength development during the last 21 days of curing also increases significantly with increasing binder content. The percentage of final material strength (as approximated by the 28-day UCS value) achieved during this period ranges from 60 to 79 percent. On average, the treated material develops approximately 72 percent of its final compressive strength at approximately 1.1 ton/m^2 per day during the last 21 days of curing.

It is noted by comparing Cell 2 and 4 results that an increase in fly ash content significantly increases the final compressive strength, as well as the rate of strength development. It is also noted by comparing Cell 3 and 4 results that the material

treated with 5.7 percent cement develops a significantly higher compressive strength at a substantially faster rate than the material with 1.9 percent cement and 3.8 percent fly ash. These results reflect the net effects of replacing the 3.8 percent of fly ash with the same amount of Portland cement. It suggests that Portland cement is more effective in producing compressive strength than fly ash.

The strength development rates for Cell 1 do not appear to correlate with the above trends. The binder contents in Cells 1 and 2 are probably too low to produce a consistent trend within their range. The variability in physical parameters among test samples also tends to obscure the results when binder content is low.

The results suggest that the range of mix ratios applied is marginal in terms of the absolute level of UCS achieved. A UCS of approximately 11 to 39 ton/m^2 typically corresponds to the consistency of a firm compacted soil, and a value higher than 39 ton/m^2 would normally be required for an unconfined application. On this basis, a mix ratio higher than the equivalent of 1.9 percent cement and 3.8 percent fly ash (as used in Cell 4) would be required to produce adequate UCS in the treated material.

8.1.6 Shear Strength

Shear strength was evaluated for the 7-day and 28-day cured materials; the results are summarized in Table B2-16. As shown in the table, the shear strength of the 28-day cured material (as indicated by the peak shear at a given normal stress) increases consistently with increasing binder content. The same trend holds for the friction angle. Cohesion of the material becomes negligible for higher binder contents.

Comparison between the 7-day and 28-day cured materials indicates that the increase in strength and friction angle and decrease in cohesion also accompany the curing of the treated sediment. This appears to correlate with a corresponding coarsening of the treated sediments especially for materials treated with higher binder content.

Table B2-16
Shear Strength

Cell	Binder	Material	Peak Shear at 4.9 ton /m^2 (ton/m^2)	Friction Angle (deg)	Cohesion (ton/m^2)	Ave Rate of Strength Development (ton/m^2/day)
1	1.5% Cement	7-Day	3.5	32.5	0.37	0.029
		28-Day	4.1	36.4	0.24	
2	1.9% Cement 1.9% Fly Ash	7-Day	5.2	35.2	1.28	0.014
		28-Day	5.5	42.0	0.78	
4	1.9% Cement 3.8% Fly Ash	7-Day	3.8	28.4	1.00	0.110
		28-Day	6.1	52.5	0.00	
3	5.7% Cement	7-Day	8.9	48.2	2.83	0.067
		28-Day	10.3	65.3	0.00	

Comparison of the results for Cells 2 and 4 indicates that the fly ash increase in Cell 4 significantly reduces the 7-day material strength, suggesting the possible effect of fly ash as a retardant on cement setting (Conner, 1990). However, an increase in fly ash content resulted in an increase in the 28-day strength. The slower, impeded setting early in the curing process and the eventually higher 28-day strength appear to explain the higher rate of shear strength development during the later curing stages of the Cell 4 material.

The strength development rates for Cell 1 do not appear to correlate with the above trends. The binder contents in Cells 1 and 2 are probably too low to produce consistent trend. The variability in physical parameters among test samples also tends to obscure the results when binder content is low.

8.1.7 Consolidation

Consolidation characteristics were evaluated for the 28-day cured material. As shown in Table B2-17, the results indicate that settlement of the 28-day cured material decreases significantly and consistently with increasing binder content. Increase in fly ash content alone can produce a pronounced reduction in settlement without an increase in Portland cement content.

Table B2-17
Consolidation

Cell	Binder	Settlement at 29.3 ton/m^2 (%)	Settlement at 39.1 ton/m^2 (%)	Settlement at 50.3 ton/m^2 (%)
1	1.5% Cement	7.8	8.9	11.2
2	1.9% Cement, 1.9% Fly Ash	5.9	7.1	9.0
4	1.9% Cement, 3.8% Fly Ash	3.5	4.1	5.2
3	5.7% Cement	2.4	2.8	3.4

8.1.8 Permeability

Permeability (hydraulic conductivity) was evaluated for the 28-day cured material; the test results are shown in Table B2-18. The results indicate that, accounting for the effects of dry density differences among test samples, permeability generally decreases with increasing binder content. The low permeability for Cell 1 seems to correlate with the appreciably high dry density in the Cell 1 sample. Fly ash appears to be an effective agent in reducing final treated material permeability. This is consistent with findings from a number of prior studies that adding pozzolan facilitates pronounced reduction in the permeability of the final product (Balzamo et al., 1996).

Table B2-18
Permeability

Cell	Binder	Moisture Content (%)	Dry Density (ton/m^3)	Permeability[2] (10^{-5} cm/s)
1	1.5% Cement	23.4-23.9[1]	1.58-1.62[1]	2.6
2	1.9% Cement, 1.9% Fly Ash	37.1-39.3	1.26-1.28	43
4	1.9% Cement, 3.8% Fly Ash	30.4-32.9	1.38-1.42	7.1
3	5.7% Cement	37.5-45.7	1.15-1.17	12

1 Initial-ending values.
2 Load = 8 ton/m^2

8.1.9 R-Value

Resistance, or R-value, was evaluated for the 28-day cured material. The results are summarized in Table B2-19. The results indicate that the R-value, which represents resistance of a material against lateral deformation under a vertical load, generally increases with binder content. The binder contents in Cells 1 and 2 are probably too low to produce a consistent trend. The variability in physical parameters among test samples also tends to obscure the results when binder content is low.

Table B2-19
R-Value

Cell	Binder	By Exudation	By Expansion
1	1.5% Cement	68	45
2	1.9% Cement, 1.9% Fly Ash	63	45
4	1.9% Cement, 3.8% Fly Ash	67	51
3	5.7% Cement	78	70

It is worth noting that the R-values by exudation are in the range of 63 to 78. This range is typical of pure sand, silty gravel, and gravel, and substantially exceeds the most frequent range of R-values for sandy silt (approximately 15 to 45), which the treated sediments were classified based on the Atterberg limits. The increase in resistance R-value with increasing binder content correlates well with the development of strength characteristics with binder content as previously discussed. The trend, however, does not directly correlate with the soil classification of the treated sediment based on the Atterberg limits. A higher R-value is typically associated with a lower plasticity. This relationship is not apparent in the Pilot Study.

As expected, as a result of water absorption, the R-values by expansion are less than those by exudation. The results indicate that, with R-values at 45 to 70, the resistance of the treated material remains comparable to that of sandy materials.

8.2 Chemical Characteristics

8.2.1 Raw Sediment Chemistry

Sediment chemistry was evaluated for the raw sediments after addition and blending of seawater. The National Oceanic and Atmospheric Administration (NOAA) biological effects ranges (NOAA, 1990) were employed to evaluate the constituent concentration data and provide a preliminary sediment quality characterization of the raw dredged sediment. The Effects Range-Low (ER-L) and Effects Range-Median (ER-M) values correspond to the lower 10 percentile and the median ranges of biological effects levels, respectively. For all their limitations, the NOAA effects ranges provide a comprehensive tool available for preliminary characterization of marine sediment quality. Table B2-20 summarizes the constituents in the raw sediment with concentration levels exceeding the NOAA biological effects criteria.

Table B2-20
Constituents Exceeding Effects Levels

Cell	Constituents Exceeding NOAA Effects Ranges	
	>ER-L	>ER-M
1	Chlordane, 4,4'-DDD, Total PCBs, Total PAHs, Lead, Mercury, Zinc	4,4'-DDE, 4,4'-DDT
2	4,4'-DDD, 4,4'-DDT, Total PCBs, Total PAHs, Lead, Mercury	4,4'-DDE
4	4,4'-DDD, Total PCBs, Total PAHs, Lead, Mercury, Zinc	4,4'-DDE
3	4,4'-DDD, Total PCBs, Total PAHs, Lead, Mercury, Zinc	4,4'-DDE, 4,4'-DDT

As shown in Table B2-20, the raw sediment is contaminated to a level that could potentially produce low-to-median ranges of adverse effects in biota. The results also indicate that the chemical characteristics of the four treatment cell sediments are similar.

A bench-scale leach test would be required to identify the actual constituents of concern to develop treatment formulas in terms of binder types, mix ratios, and pH regimes for their immobilization. Due to the lack of Bench Study results, the three metals found with elevated concentrations in the bulk chemistry analysis - zinc, lead, and mercury - were identified as the target contaminants. A reduction of leaching potential for target contaminants was considered a measure of the effectiveness of the Cement Stabilization. The organic contaminants exceeding effects ranges were not treated as targets and their immobilization would be a by-product of a metal-oriented Cement Stabilization process.

8.2.2 Process Water Chemistry

Water chemistry analyses were performed on samples of seawater and fresh water that was added into the treatment system as process water. Samples included seawater composite used for raw material slurry, fresh water used for Portland cement slurry, and freshwater used for Portland cement and fly ash mixture slurry. The fresh water was sampled in two groups since the Portland cement slurry and the Portland cement-fly ash slurry were produced by two different batch plants. The test results are shown in Attachment C - Laboratory Chemical Analyses.

The results show the absence of PCBs, pesticides, butyltins, sulfides and PAHs above detection limits in all water samples. Metals were mostly present at low levels except for zinc in the Portland cement slurry water sample, which exhibited a concentration of 830 mg/L. The relatively high concentration of zinc may be related to the galvanized water piping at the batch plant. Comparison of zinc levels in the treated materials from Cells 1 and 3, where Portland cement slurry was used, with those from Cells 2 and 4, however, indicated no measurable effects of the elevated zinc in the process water.

8.2.3 Contaminant Leaching by Synthetic Precipitation Leaching Procedure (SPLP) and Waste Extraction Test (WET)

Chemical leach tests were performed on the raw sediment to determine the baseline conditions of contaminant leaching, and on the 28-day cured material to determine leaching from the treated material. The tests consist of leaching by the Synthetic Precipitation Leaching Procedure (SPLP) (EPA, 1994) and by the Waste Extraction Test (WET) (CCR, 1984). The complete results of these tests are shown in Attachment C—Laboratory Chemical Analyses. The test results are summarized in Table B2-21.

Table B2-21
Contaminant Leaching

Cell	Binder	Material	Test	pH	Arsenic	Cadmium	Chromium	Copper	Lead	Mercury	Nickel	Silver	Zinc	PCBs	PAHs	Pesticides	TRPH	Sulfide
					Mg/L									µg/L			Mg/L	
1	1.5% Cement	Raw	Bulk[1]	*8.2*	7.2	0.84	51	44	63	0.49	15	0.23	130	150	16000	79.2	540	220
			SPLP	*7.4*	2.1	ND	ND	56	0.94	ND	19	0.53	580	ND	ND	ND	ND	ND
			WET	*6.6*	5.0	0.40	1.2	23	ND	ND	9.0	ND	94	ND	ND	0.10	ND	ND
		28-Day	SPLP	*3.0*	12	ND	1.4	24	0.61	ND	2.3	0.23	25	ND	ND	ND	ND	ND
			WET	*10*	12	ND	0.7	21	ND	ND	9.8	ND	ND	ND	ND	ND	ND	ND
2	1.9% Cement 1.9% Fly Ash	Raw	Bulk	*8.2*	7.1	0.53	53	44	47	0.39	16	0.29	84	160	18000	47.1	540	250
			SPLP	*7.4*	ND	ND	ND	43	0.77	ND	8.9	0.4	540	ND	ND	ND	ND	ND
			WET	*1.9*	5.8	0.55	1.6	36	0.73	ND	14	ND	1800	ND	ND	0.05	ND	ND
		28-Day	SPLP	*9.7*	6.3	ND	1.9	84	ND	ND	6.8	ND	21	ND	29	ND	ND	ND
			WET	*11*	6.3	ND	4.8	130	ND	ND	22	ND	ND	ND	99	0.12	ND	ND
4	1.9% Cement 3.8% Fly Ash	Raw	Bulk	*8.4*	6.0	0.46	47	41	51	0.43	15	0.21	120	160	20000	46.2	660	210
			SPLP	*6.7*	ND	ND	ND	8.3	ND	ND	4.7	0.4	590	ND	ND	ND	ND	ND
			WET	*6.6*	4.0	0.32	1.1	8.9	ND	ND	9.4	ND	96	ND	ND	ND	ND	ND
		28-Day	SPLP	*2.3*	5.0	0.45	2.2	76	ND	ND	8.6	0.27	17	ND	ND	ND	ND	ND
			WET	*10*	6.3	ND	8.9	95	ND	ND	20	ND	ND	ND	ND	0.11	ND	ND
3	5.7% Cement	Raw	Bulk	*8.5*	6.5	0.51	56	46	50	0.38	16	0.25	120	190	9900	68.5	670	210
			SPLP	*6.3*	1.1	0.47	ND	31	ND	ND	5.2	ND	630	ND	ND	ND	ND	ND
			WET	*6.2*	4.8	0.45	1.1	34	ND	ND	9.0	ND	150	ND	ND	ND	ND	ND
		28-Day	SPLP	*11*	1.4	ND	2.8	170	0.57	ND	17	0.61	22	ND	25	ND	ND	ND
			WET	*11*	3.9	ND	12	260	ND	ND	34	ND	ND	ND	34	ND	ND	ND

[1] Bulk chemistry results for raw sediments.

The results indicate that Cement Stabilization is successful in binding zinc, lead, and cadmium. The leached concentrations of these metals were generally reduced to either below detection limits (lead and cadmium) or by one to two orders of magnitude (zinc). Mercury was not detected in any of the leachates. Since zinc, lead and mercury are the three metals with elevated concentrations in the raw sediment that exceed NOAA ER-L levels, the process appears successful in the targeted treatment of these contaminants.

For other metals, the results show that the 28-day material produced higher leached concentrations than the raw sediment. The results are consistent with the well-established knowledge that it is impossible to bind all metals at one single pH value,

and that mobilization of certain metals can occur (Myers et al., 1992 and 1994, Flemming et al., 1991).

It is worth noting that the treatment process was able to raise pH values from the high solubility range of approximately 6 into the desirable range of 9.7 to 11 corresponding to low solubility conditions for most metal hydroxides. The results, however, show an increase in leached concentrations for a number of metals, most conspicuously copper, since copper is least soluble within the pH range of 8 to 11. Solubility of copper at a pH around 6 is approximately 1,000 times greater than at pH around 11. The present results indicate the opposite effect. Similar contradictory results are observed for some other metals. The lack of expected correlation between pH and metal solubility may suggest the presence of confounding factors.

One of the potential factors that may have contributed to the irregularities is the difference in sample grain size between the raw and 28-day samples. The leach tests require reduction of sample grain size to below 9.5 mm (SPLP) and 2 mm (WET) by crushing, but do not specify gradation below these maxima. Grain-size distribution, however, is known to affect leachability because of the differences in surface area of exposure. Finer gradations increase exposure to leachate and increase leaching rates, but also provide greater surface area for re-adsorption of leached contaminants. The opposite is true for coarser gradations. The lack of specification for sample grain size gradation can therefore introduce significant variability in leachate concentrations (Conner, 1990).

For the Pilot Study, the raw samples were taken in-situ from the field, while the 28-day samples were from compacted cores. It is likely that the crushed samples were appreciably different in gradation, even though both samples met the maximum grain size requirements of SPLP and WET. It is also likely that the 28-day samples were coarser upon crushing due to their original compacted and solidified state. A finer gradation raw sample tends to provide greater re-adsorption potential for leached contaminants. The opposite tends to be true for a coarser 28-day sample. This mechanism may explain the observed lower leachate concentrations from the raw material than from the 28-day sediment.

In order to eliminate sample gradation differences as a factor, samples should be reduced to comparable gradations before leachate testing. Comparable gradations can be determined based on D_{50} or for better definition, on D_{50}, D_{60}, and D_{10}.

Other factors may also have contributed to the observed irregularities. These include potential presence of elevated metals in the grade of fly ash used as well as the unknown effects of chlorides. The absence of the anomalies at issue in the Bench Study test results, however, should eliminate these as primary causes. Nevertheless, testing fly ash for contaminants may be desirable to exclude it as a source of contaminants.

In summary, the following conclusions are identified based on laboratory test results.

- Cement Stabilization was successful in binding targeted elevated metals present in the Pilot Study dredged sediment.
- The technology was shown to be contaminant-specific. For full-scale field application, target contaminants should first be identified and treatability test conducted to determine proper binder types, mix ratios and pH control to ensure immobilization of the target contaminants.
- Uncertainties remain about the lack of correlation between pH and metal solubility for a number of non-targeted metal contaminants that were found to be mobilized upon treatment.
- Results do not identify whether Cement Stabilization is effective for treating organic contaminants.

8.2.4 Sodium Chloride Leaching by Monolithic Leaching Test (MLT)

A Monolithic Leaching Test (MLT) procedure was performed on the raw sediment and the 28-day cured material to determine the effectiveness of Cement Stabilization in reducing chloride leaching. Sodium chloride (NaCl) was chosen as the target contaminant for its abundance in seawater as well as its high solubility and mobility in sediment when subject to leaching events such as rainfall. A monolithic test procedure was selected for its relevance to the geotechnical conditions under which the treated sediment would be applied for beneficial use. The MLT procedure is a modified form of the ANS 16.1 procedure (ANS, 1986). A brief background of the method is discussed in Section 3 where the design of testing program is discussed.

Complete results of the tests are given in Attachment C—Laboratory Chemical Analyses. Pertinent test results are summarized in Table B2-22.

Table B2-22
Sodium Chloride Leaching

Cell	Binder	Material	Leaching Batch Time (day)							Total Leached (ppm)	Leach Reduction (%)
			0.08	0.3	1	2	3	4	5		
			NaCl Leached (ppm)								
1	1.5% Cement	Raw	390	700	480	151	51.0	17.3	8.0	1,797	12
		28-Day-Cured	580	360	390	160	45.0	37.0	11.2	1,583	
2	1.9% Cement 1.9% Fly Ash	Raw	350	680	280	86.0	15.5	8.6	5.0	1,425	25
		28-Day-Cured	490	360	148	42.0	13.2	10.4	5.2	1,069	
4	1.9% Cement 3.8% Fly Ash	Raw	550	810	250	79.0	18.5	12.2	5.4	1,725	43
		28-Day-Cured	510	330	96.0	26.8	9.0	6.4	4.5	983	
3	5.7% Cement	Raw	254	770	510	310	88.0	28.0	8.9	1,969	53
		28-Day-Cured	440	300	113	34.0	15.0	9.2	6.0	917	

The results indicate that NaCl leaching was effectively reduced upon treatment. The level of leach reduction increases consistently and substantially with increasing binder content. At a mix ratio of 5.7 percent cement, NaCl leaching was reduced by 53 percent compared with the raw sediment. It is worth noting that a mix ratio of 5.7 percent cement is relatively moderate compared with most literature ranges in application for dredged sediments. Considering the rapid increase in leach reduction with increasing binder content, it is expected that chloride leaching from the treated sediment can be minimized within practical range of mix ratios.

It is also worth noting that NaCl is a highly soluble and mobile constituent in a wet sediment. The success of Cement Stabilization in minimizing NaCl leaching from the treated sediment reflects the ability of the treated material to effectively contain and encapsulate a highly mobile contaminant within its matrix when in monolithic form. The present results on NaCl leaching may provide a rather conservative measure of actual field leaching potential for most contaminants including metals and organics. The primary implication of this finding is that even if SPLP or WET test results indicate elevated concentrations, its actual field leach potential can be substantially

lower under most field conditions to which the treated sediment is expected to be applied for beneficial use. The substantial reduction in contaminant leaching potential from the treated sediment in monolithic form should be considered in conjunction with the results of the SPLP and WET to provide a sound assessment of leachability of any contaminants of concern in a treated sediment.

9 REVIEW OF EVALUATION CRITERIA

This section provides a summary evaluation of the Pilot Study in terms of effectiveness, implementability, environmental impact, and cost.

9.1 Technology Effectiveness

The Pilot Study results indicate that Cement Stabilization can be an effective alternative for the treatment of contaminated, fine-grained dredged sediments from Los Angeles County. The results demonstrated that Cement Stabilization was effective in treating a fine-grained dredged sediment to produce an engineering fill with substantially enhanced strength characteristics. The significantly improved geotechnical properties afford a wide range of opportunities of beneficial uses of the treated sediment.

The Pilot Study also demonstrated that Cement Stabilization appears effective in binding targeted metal contaminants. The leachability of the metals was found to be substantially reduced upon treatment.

The Pilot Study further demonstrated that this alternative can be effective in encapsulating and containing a highly soluble and mobile contaminant such as sodium chloride. The leaching potential of sodium chloride was consistently and substantially reduced with increasing binder content within the relatively moderate range of mix ratios tested. Recognizing the highly soluble and mobile nature of sodium chloride, the effective reduction in chloride leaching upon treatment suggests that similar results can be expected for most contaminants including metals and organics. Hence, even if a contaminant is found to significantly leachable based on the SPLP or WET test results, its actual field leaching potential may be negligible under field geotechnical conditions in which the treated material could be applied for beneficial use. The substantial reduction in contaminant leaching potential from the treated material in a monolithic form should be considered in conjunction with the results of the SPLP and WET to provide a sound assessment of leachability of any contaminants of concern in a treated sediment.

For all its demonstrated effectiveness, Cement Stabilization was also shown to be contaminant-specific. Certain metals in the raw sediment appeared to be mobilized upon treatment. These results potentially indicate that Cement Stabilization may not be

effective for all different types of contaminants or contaminant concentrations. This stresses the importance of performing bench-scale treatability study for each project to develop the correct mix ratios and other factors that would impact the effectiveness of this treatment alternative. For full-scale field application, target contaminants should first be identified and a bench-scale treatability test conducted to determine proper binder types, mix ratios and pH control to ensure immobilization of the target contaminants.

Uncertainties remain about the lack of correlation between pH and metal solubility for a number of non-target metal contaminants that were found mobilized upon treatment. Also uncertain is the ability of Cement Stabilization to treat organic contaminants, which is an issue that has been a subject of active research in the scientific community and soil remediation industry.

9.2 Implementability

The Pilot Study results indicate that Cement Stabilization can be implemented with a land-based process system. The study demonstrated that in-ground treatment cells provide a convenient and economical means as vessels within which to treat the dredged sediment and complete initial curing. Operational controls over in-cell material handling, debris removal, binder introduction, blending, cured material excavation, as well as sample collection were executed satisfactorily without difficulty. The equipment configuration and its operating scheme, which were designed to simulate a full-scale project, were shown to be implementable and efficient both logistically and operationally.

The Pilot Study operations results also showed that field execution schedule and cost can be impacted by the selected mix ratios. Lower mix ratios may provide savings in binder cost, but can negatively impact the overall production schedule and cost due to the need for additional curing time to achieve required set conditions for further handling and field placement. The higher mix ratios implemented in the Pilot Study showed rapid setting and development of desirable operational handling and compaction properties.

The initial difficulties of excessive dust encountered with dry binder introduction indicate that introduction of binder in a pre-mixed slurry form, as later implemented throughout the Pilot Study, is a desirable method in terms of air emission control.

The land-based operations system implemented in the Pilot Study can be readily adapted to a barge-based system, where treatment takes place in a series of docked barges instead of upland constructed cells, without significant modification. Most of the findings and conclusions from the Pilot Study with regard to treatment operations also apply to a barge-based system. The implementation of a land-based treatment system suggests that a similar level of implementability can be expected from a barge-based treatment system.

Cement Stabilization implementation does have limitations with respect to identifying treatment cell locations, and final disposal locations for the treated material. The small volume of sediment treated for the Pilot Study made the identification and selection of the treatment location easier than would be the case for a full-scale project.

9.3 Environmental Impacts

The Pilot Study operations and onsite monitoring results indicate no observable impacts that could potentially result in significant environmental impact to the project area.

The Pilot Study site was located near the operating POLA dredged material holding basin. The potential effects of seepage of the interstitial water drained from the dredged sediment placed in the treatment cells into the site ground is expected to be similar to those in the neighboring holding basin. No significant alteration to existing conditions occurred with the project.

The Pilot Study operations were executed in compliance with the Spill Prevention Plan. Handling and transfer of raw dredged sediment from the holding basin to the treatment cells were conducted with lined trucks and under detailed operational control and monitoring by designated personnel. As a result, no significant in-transit spill of the raw dredged sediment occurred

The project generated no residual process water. Other residual wastes including debris and operations wastes were managed with proper onsite handling, storage, offsite transfer, and landfill disposal without spill. The site was backfilled and restored with indigenous site soil or treated materials at equal and reduced contamination levels compared with pre-project conditions.

Potential air quality impact from the initially planned use of dry-cement injection method was averted with the prompt on-site decision to switch to a slurry-based binder introduction method when excess dust was observed.

Potentially increased volatile constituent emission during the treatment process could occur as a result of blending and heat generation that accompanies the hydration process. The extent of the potential added volatilization, however, depends on the availability of the volatiles in the raw sediment before treatment. Substantial release of volatile constituents during the treatment process is not expected to have occurred. On-site observation by the project personnel during treatment did not indicate odor at levels that were appreciably different from those experienced during excavation and transfer of the raw sediment from the holding basin prior to treatment.

9.4 Cost

The Pilot Study treated a approximately 1,850 m^3 of dredged sediment at a total cost of approximately $521,000. The original material from the holding basin was appreciably dryer than a typical as-dredged material and was slurried with additional seawater. The Pilot Study treatment costs, therefore, represent those of an as-dredged sediment.

Table B2-23 shows the primary treatment costs of the Pilot Study. It was noted that these costs were estimated based on a planned treatment volume of 2,240 m^3. Although a smaller volume was actually executed in the field, the difference is not expected to result in significant alternation of these costs.

Table B2-23
Treatment Costs

Item	Cost ($)
Treatment Cell Construction[1]	48,000
Portland Cement/Fly Ash Slurry [2] Portland Cement Slurry [2]	15,000 8,446
Treatment[3]	95,840
Compaction Tests[3]	49,520
Residuals Disposal[4]	9,994
Sampling and Testing Report	106,312 61,875
Field Consulting[5]	52,097
SUBTOTAL	**447,084**
Overhead @ 8.0%	**35,767**
Profit @ 6.5%	**31,385**
Bond @ 1.23%	**6,325**
TOTAL	**520,561**

1 Four cells. Mobilization/demobilization included
2 Premixed slurries ordered from two different batch plants
3 Mobilization/demobilization included
4 Including debris, operations wastes, and treated material final disposal.
5 Including cell design, construction planning, on-site monitoring, QA/QC, and project analysis

The cost of the Pilot Study is included herein to provide documentation and a basis for costing a pilot-scale study of similar nature. The Pilot Study cost cannot be translated to that of a full-scale project on a unit-cost basis since the goal of the Pilot Study was to acquire technical and operational information. The benefit of the Pilot Study is measured by the information acquired and data collected rather than the amount of dredged material treated during the study. The unit cost of the Pilot Study is, therefore, of little utility beyond costing of a similar pilot-scale study. It is the details of the cost items associated with the operations elements evaluated in the Pilot Study that are of use to provide a basis for estimating the cost of a full-scale project. The latter is further discussed in the Section 10.

10 BASELINE CASE EXTRAPOLATED RESULTS

This section provides an assessment of the extrapolated performance of a baseline case full-scale dredged sediment project in the Los Angeles region based on the Pilot Study results. The scale-up evaluation for the Baseline Case project provides a basis for a full-scale comparison with other sediment management alternatives presently under consideration.

10.1 Baseline Case Project

Two treatment scenarios are considered to provide flexibility in the evaluation and basis for future selection: land-based treatment and barge-based treatment. Details of the two treatment scenarios are outlined below:

10.1.1 Scenario 1: Land-Based Treatment

The project requires an open area in the Ports for use as the treatment site. An unpaved open area is assumed to be available. A paved open area will require different site design and preparation activities. The construction sequence for the rest of the treatment activities will be similar. An area of approximately 4,000 m^2 will be required for the site.

The project also requires a dredged material holding basin within the Ports. The holding basin will be an excavated storage basin constructed in an open area near the Ports' wharf front. The basin will be sized to make up the difference in production rate between dredging and treatment production. Existing holding basins such as the facility at the POLA Anchorage Road can be used if available. The construction activities include the following:

- Site preparation
- Treatment
- Treated material disposal
- Residual management

The site will first be prepared by constructing a number of treatment cells. These cells will be excavated in the ground and will have typical sizes comparable to those of barges used in dredging operations. The bottoms of the cells will be set above the

ground water table at the site, and bermed around the perimeters to achieve adequate holding volumes. The site perimeter will also be bermed to control potential runoff.

The treatment process system will be mobilized to the site and set up according to plans and specifications. Primary equipment in the process system will depend on specific project design, but will typically include excavators, binder mixer, storage silos, water tanks, loaders, dump trucks and roll-off containers.

The dredged sediment will be delivered to wharf site by barges, transferred by clamshells to lined dump trucks, and trucked to, and unloaded in, the dredged material holding basin for temporary storage. The sediment in the holding basin will later be excavated, either concurrently with or after dredging operation, with excavators and transferred by lined dump trucks to the treatment site. The sediment will then be placed within the treatment cells for treatment.

The sediment placed in the treatments cells will be preprocessed to remove debris. Stabilization binders will then be introduced and blended with the sediment. Upon thorough blending, the sediment will be allowed to cure for 12 to 24 hours in-cell to achieve desired workability.

After initial-curing, the treated sediment will be removed from the cell, placed in lined dump trucks, hauled to a landfill project area, and placed as construction fill. If a concurrent fill project is not available or the placement at the fill site requires specific scheduling, the treated sediment will be placed at a temporary stockpiling area.

Upon completion of treatment, the treatment cells will be backfilled with indigenous soil. Debris and any sludge residuals will be disposed of in compliance with applicable regulatory requirements. Residual process water will be tested for compliance with applicable discharge requirements and disposed of accordingly. Operations wastes will be collected and disposed of in a municipal landfill.

The project will be demobilized from the site once project residues are fully removed and disposed of in compliance with regulatory requirements, the treatment cells backfilled, and the site restored to its pre-project conditions.

10.1.2 Scenario 2: Barge-Based Treatment

The project requires an open dockside area in the Ports for use as the treatment site. An area of approximately 300 m alongshore by 80 m in-shore will be required for the site. The alongshore length of the site will allow concurrent docking of three barges and, therefore, will depend on the size of the barges used.

The construction activities include the following:

- Site preparation
- Treatment
- Treated material disposal
- Residual management

The treatment system will be mobilized to the site and set up according to plans and specifications. Primary equipment in the process system will depend on project design, but will typically include excavators, binder mixer, storage silos, water tanks, loaders, dump trucks and roll-off containers. Runoff and spill prevention measures such as berms, lines and drop plates will be installed as required. The site will be segmented into three processing areas (i.e., preprocessing, blending, and curing areas).

On arrival of a barge load, the sediment will be prepared at the preprocessing area. Excess water in the barge will be pumped out to a process water tank for recycling in the blending process. Debris in the barge load will be removed to a roll-off container by raking using a rake-head excavator. The preprocessed barge load will then be moved forward to the blending area, where a long-stick excavator equipped with binder injection capability will be used to inject the prescribed cement binder and blend it with the dredged sediment.

Upon thorough blending over a specified blending time, the barge will be moved further to the curing area, where the blended sediment will go through an initial period (approximately 12 to 24 hours) of in-barge curing to achieve workability. After initial-curing, the treated sediment will be removed from the barge, placed in lined dump trucks, hauled to a landfill project area, and placed as construction fill. If a concurrent fill project is not available or the placement at the fill site requires specific scheduling, the treated sediment will be placed at a temporary stockpiling area.

Upon completion of treatment, debris and any sludge residuals will be disposed of in compliance with applicable regulatory requirements. Residual process water will be tested for compliance with applicable discharge requirements and disposed of accordingly. Operations wastes will be collected and disposed of in a municipal landfill.

The project will be demobilized from the site once project residues are fully removed and disposed of in compliance with regulatory requirements, and the site restored to its pre-project conditions.

10.1.3 Basis for Scale-Up Adjustment

The Pilot Study was designed to facilitate scaling up the pilot-scale results to a full-scale project as described above. The field operation was specified and executed to simulate a full-scale project so that uncertainties in adjusting results from the pilot scale to the full-scale are minimized. Major cost components including siting and site preparation, dredged sediment sourcing, binder sourcing, equipment selection, treatment operation and scheduling were designed and implemented in a manner that provides direct transferability to a full-scale project without need for significant re-evaluation. Primary considerations that constitute the basis for scaling up to a full-scale project are discussed below.

Project Site

The Pilot Study project site, with its location at the POLA Anchorage Road facility, represents a typical land-based treatment site that sould be utilized for a full-scale

project. The acreage of the site and capacities of the cells are comparable to those required for a full-scale project. Equipment requirements and logistics for both on-site operations and off-site material transfer would not be significantly different between the Pilot Study and a full-scale project.

For a barge-based treatment scenario, the need for treatment cells and a dredged material holding area is eliminated. The barges transporting the dredged sediment would function as both treatment cells and holding vessels during the dockside treatment process. All surrounding operations would remain substantially similar between land- and barge-based operations.

Dredged Material

The Pilot Study treated the dredged sediment from the harbor channels of the POLA, where some of the most contaminated dredged sediment in the region were generated historically. The Pilot Study sediment, is typical of the contaminated, dredged sediments from the region based on historical data. The cost (primarily binder cost) associated with treatment of the Pilot Study material should be representative for a full-scale project for a typical dredged sediment from the region.

Binder

The Pilot Study utilized binder slurry batch plants located in the vicinity of the project site in the POLA. Similar binder sources would be used for a full-scale project similarly located within the Ports area. Binder acquisition and transport logistics would therefore be similar between the Pilot Study and a full-scale project.

Equipment

The Pilot Study applied equipment that would be used in a full-scale project. In a full-scale project, the treatment system would be nearly identical in configuration to that of the Pilot Study. Hence, the increase in treatment volume in a full-scale project would primarily entail proportional increases in the number of equipment pieces and operators, rather than changes in the composition of the treatment train. The equipment and operations costs from the Pilot Study can be readily scaled up to a full-scale project without need for significant re-evaluation.

For a barge-based treatment scenario, the need for treatment cells and dredged material holding area is eliminated. The barges transporting the dredged sediment would function as both treatment cells and holding vessels during the dockside treatment process. Equipment used solely for the purposes of treatment cell construction and material transfer between the holding basin and the cells would not be needed as a result. All other equipment would remain substantially similar between land- and barge-based operations.

Operations

The Pilot Study on-site treatment operations and scheduling were designed and executed to simulate those of a full-scale project. The treatment procedures, operation patterns and on-site controls that would be typical of a full-scale project were followed throughout the treatment, stockpiling, and placement lay-down processes. Additional considerations when scaling up to a full-scale project would include the distance of treated material transfer from the treatment site to the placement site and the equipment associated with the transfer. All other elements in the processes remain readily transferable from the Pilot Study to a full-scale project without need for significant re-evaluation.

It should be noted that compaction of the treated sediment in the Pilot Study to test physical and chemical properties of the treated material in a field environment is not a component of the treatment scenarios as previously defined and should be eliminated from cost considerations. The treatment process terminates when the treated sediment is transferred to, and stockpiled at, the placement site. Subsequent handling, placement, and compaction are assumed to be in the care of the receiver project.

10.2 Predicted Performance

10.2.1 Technology Effectiveness

Cement Stabilization is expected to be effective for a full-scale project. The effectiveness level will be substantially improved if a detailed pre-project bench-scale treatability study is conducted to accurately identify target contaminants, as well as

to formulate treatments specific to the identified target contaminants in terms of binder formula, mix ratio, and pH control.

Cement Stabilization is also expected to be effective for a full-scale project in enhancing the engineering properties of the dredged sediment. The effectiveness level will be further improved with mix ratios higher than the range implemented in the Pilot Study. Enhancement of primary engineering properties such as strength characteristics will be achieved with relative certainty. A treatability study will be needed to meet specific property requirements.

Cement Stabilization is further expected to be effective for a full-scale project in reducing chloride leaching from treated sediment under field compacted geotechnical conditions under which the treated sediment is most likely to be applied for beneficial use. Reduction in chloride leaching will be achieved with relative certainty. A treatability study will be needed, to meet specific chlorides levels.

10.2.2 Implementability

Field implementation is expected to be generally efficient operationally and logistically on a full-scale for both land- and barge-based treatment scenarios. The equipment configuration and operating schemes should be capable of processing the dredged sediment at a full-scale production rate of approximately 3,000 – 4,000 m^3 per day.

The availability of a full-scale project site within the Ports is an important factor in implementability. Siting a full-scale project would need to be conducted opportunistically. Making a large-scale site available for treatment operations may be difficult for the Ports to provide. Available candidate sites would include the POLA Anchorage Road area, where the Pilot Study was conducted, and the periodically vacant piers at both Ports.

In addition to project siting, a full-scale project needs to be scheduled and coordinated with a receiver project (or multiple receiver projects) that accepts the treated material for beneficial use. Typical receiver projects would include port

development landfill projects that take place within the Ports on a regular, continuing basis. Other potential receiver projects would include major construction and transportation projects where large quantities of fills are required within Los Angeles County and neighboring counties within economical transport distances. Since a potentially large stockpiling area for the treated sediment will be required if an adequate receiver project is not available in a timely manner, identification of, and coordination with, a receiver project is crucial to the implementability of a full-scale project. Adequate lead time for advance planning and coordination should be allowed to secure a receiver project.

10.2.3 Environmental Impacts

A full-scale project is not expected to result in significant environmental impact to the project area if designed and conducted based on considerations and requirements consistent with those of the Pilot Study. Primary considerations for minimizing potential environmental impact include the following:

- Locate the project site for land-based treatment where temporary dredged material storage is currently, or can be, permitted (e.g., the POLA Anchorage Road dredged material holding basin). The proximity of treatment cells to the permitted storage area allows minimal alteration to the permitted seepage conditions for interstitial water from the dredged sediment. Line the treatment cells if (1) additional protection from seepage is required, or (2) the treatment site is located away from a permitted dredged material storage area.
- Design and implement a comprehensive Spill Prevention Plan to protect the treatment site environment as well as areas along the material handling/transfer routes between barges, treatment site, and placement destination that are susceptible to spill during project operations. Conduct material handling and transfer with lined equipment and spill collection/containment measures under detailed operation control and monitoring by designated personnel.
- Manage project residuals including residual process water, debris and operations wastes with proper handling, storage, transfer, and disposal procedures. Recycle excess barge water as process water. Dispose of residuals in compliance with applicable laws and regulations.

- Restore the project site to its pre-project conditions. Backfill the treatment cells in a land-based treatment operation with indigenous or treated material if the site is not designated for long-term use, or if repeat use of the site is not expected for the near future.

Potentially increased volatile constituent emissions could occur during the treatment process as a result of blending and heat generation that accompanies the cement hydration process. The extent of the potential added volatilization, however, depends on the availability of the volatiles in the raw dredged material before treatment. Although substantial release of volatile constituents during the treatment process is not expected to occur, volatiles emission control measures can be applied as preventative measures for full-scale projects.

10.2.4 Cost

The estimated cost for a full-scale, land-based Cement Stabilization project in Los Angeles region is shown in Table B2-24. The cost covers dredging, transport, and treatment activities that start from the point of barge delivery of the dredged sediment at the dockside of a port facility within the Ports, and terminate at the point of truck delivery of the treated sediment at the placement receiver site. The cost does not include stockpiling and placement costs at the receiver site.

The estimate indicates that the construction operating cost for a full-scale, land-based Cement Stabilization project is expected to be approximately $46 per cubic meter.

Although the cost of a full-scale, barge-based Cement Stabilization project was not estimated in this study, it is expected to be in the same range as its land-based counterpart in view of their similarity in operations and equipment as discussed previously.

Table B2-24
Full-Scale Land-Based Cement Stabilization Project Cost

Project Volume	**100,000**	**Cubic Meters**
Material to be Treated Per Day	**4,000**	**Cubic Meters**
Working Days Required	**25**	**Days**

Item Description		Rate	Quantity	# Units Req.	Type of Units		Total
Dredging							
Mobilization/Demobilization		$ 290,716.00	1	1	LS	$	290,716
Dredging and Hauling		$ 8.24	100,000	1	m^3	$	824,000
SUBTOTAL DREDGING						**$**	**1,114,716**
TOTAL DREDGING						**$**	**1,114,716**
					Unit Cost	**$**	**11.15**
Treatment Equipment							
Treatment Cells		$ 35,000.00	5		Single	$	175,000
CAT 225		$ 975.00	4	25	Day	$	97,500
Hitachi EX400		$ 975.00	2	25	Day	$	48,750
CAT 980		$ 900.00	1	25	Day	$	22,500
Rake Attachment		$ 250.00	1	25	Day	$	6,250
Concrete Pump		$ 800.00	2	25	Day	$	40,000
WBR Mixing Head		$ 4,800.00	2	25	Day	$	240,000
SUBTOTAL EQUIPMENT						**$**	**630,000**
FUEL		**$ 1.60**	**1**	**4,500**	**GAL**	**$**	**180,000**
TOTAL EQUIPMENT						**$**	**810,000**
					Unit Cost	**$**	**8.10**
Treatment Labor							
Project Super		$ 60.00	1	200	Hours	$	12,000
Excavator Operator		$ 50.00	2	400	Hours	$	40,000
CAT 980		$ 50.00	1	200	Hours	$	10,000
Pump Operators		$ 35.00	1	200	Hours	$	7,000
Techs		$ 28.00	4	800	Hours	$	89,600
Project Consultant		$ 225.00	1	200	Hours	$	45,000
Project Manager		$ 75.00	1	200	Hours	$	15,000
SUBTOTAL						**$**	**218,600**
TOTAL LABOR						**$**	**218,600**
					Unit Cost	**$**	**2.19**
Transportation to Treatment Site (within 4 Miles)							
Ten Wheelers (to Cell)		$ 65.00	13	$ 845.00	Hourly	$	169,000
End Dumps (Cell Laydown)		$ 68.00	20	$ 1,360.00	Hourly	$	272,000
SUBTOTAL						**$**	**441,000**
TOTAL TRANSPORTATION						**$**	**441,000**
					Unit Cost	**$**	**4.41**
Reagents							
Batch Plant		$ 6,500.00	1	25	Day	$	162,500
Portland Cement	5%	$ 115.00	200	25	Day	$	575,000
SUBTOTAL						**$**	**737,500**
TOTAL REAGENTS						**$**	**737,500**
					Unit Cost	**$**	**7.38**
Mobilization/Demobilization							
Stabilization Cells		$ 8,000.00	5		Out Only	$	40,000
Batch Plant		$ 6,500.00	2		In & Out	$	13,000
CAT 225		$ 650.00	2		In & Out	$	1,300
Hitachi EX400		$ 650.00	2		In & Out	$	1,300
CAT 980		$ 600.00	2		In & Out	$	1,200
Rake Attachment		$ 300.00	2		In & Out	$	600
Concrete Pump		$ 300.00	2		In & Out	$	600
Mixing Head		$ 400.00	2		In & Out	$	800
SUBTOTAL						**$**	**58,800**
TOTAL MOB/DEMOB						**$**	**58,800**
					Unit Cost	**$**	**0.59**
TREATED MATERIAL PLACEMENT/RESIDUAL DISPOSAL							
Treated Material to Placement Site (within 4 Miles)		$ 441,000.00	1		Item	**$**	**441,000**
Residuals Disposal and Site Restoration		$ 1.00	100,000		Cubic Meter	**$**	**100,000**
SUBTOTAL						**$**	**541,000**
TOTAL DISPOSAL						**$**	**541,000**
					Unit Cost	**$**	**5.41**

11 CONCLUSIONS AND LESSONS LEARNED

This section summarizes the conclusions based on the findings of the Pilot Study.

11.1 Conclusions

Cement Stabilization appears to be an effective alternative for treating contaminated sediments from the Los Angeles region. The technology was capable of enhancing many critical engineering characteristics of the dredged sediment, reducing the leachability of metals, and decreasing the leachability of chlorides. Cement Stabilization's effectiveness is constituent-specific and requires conducting a bench-scale treatability study prior to full-scale field implementation to identify target contaminants and determine proper binder types, mix ratios and pH control.

Cement Stabilization is considered an implementable alternative for treating contaminated sediments from the Los Angeles region using a land-based process. The land-based system as implemented in the Pilot Study can also be adapted to a barge-based system with similar levels of implement ability. The Pilot Study treatment system can readily be scaled up to a full-scale project without significant modification. Site selection for a full-scale project, however, will most likely be conducted opportunistically within the Ports in view of the relatively short period of usage by a project that precludes retaining a permanent site. An adequate receiver project and site also needs to be identified to receive the treated dredged sediment.

This alternative is not expected to result in significant environmental impacts if it is designed and conducted in a manner consistent with requirements implemented in the Pilot Study.

11.2 Lessons Learned

In general, the project proceeded and was constructed as planned. The primary lessons learned through project construction are as follows:

- Certain metals in the raw sediment were found to mobilize upon treatment. Uncertainties remain as to the lack of correlation between pH and metal solubility for a number of non-target metal contaminants that were found mobilized upon

treatment. This stresses the importance of conducting a treatability study prior to a full-scale project.

- The technology's ability in treating organic contaminants is uncertain. No specific trend in constituent levels was identifiable upon treatment, implying that the technology may not be effective for dredged sediments with high organic contaminant levels.
- Excessive cement dust emission was found to occur with dry binder addition. It is preferable to pre-mix binder into a slurry form before its introduction into the treatment cell to reduce air emissions.
- The selected mix ratio can impact the field execution schedule. Lower mix ratios may provide savings in binder cost, but can also negatively impact the overall production schedule and cost due to the need for additional curing time to achieve required set conditions for further handling and field placement. Hence, lower mix ratios may not necessarily provide lower overall treatment cost. An optimum mix ratio needs to be determined based on project specific conditions.

12 REFERENCES

ANS, 1986, "Measurement of the Leachability of Solidified Low-Level Radioactive Waste by a Short-Term Procedure, Working Group ANS 16.1," Final Draft, American Nuclear Society.

ASTM, 2000a, "ASTM D 4318: Standard Test Methods for Liquid Limit, Plastic Limit, and Plasticity Index of Soils," American Society for Testing and Materials, W. Conshohocken, PA.

ASTM, 2000b, "ASTM D 422: Standard Test Method for Particle-Size Analysis of Soils, American Society for Testing and Materials," American Society for Testing and Materials, W. Conshohocken, PA, 2000.

ASTM, 2000c, "ASTM D 2487: Standard Practice for Classification of Soil for Engineering Purposes," American Society for Testing and Materials, W. Conshohocken, PA.

ASTM, 2000d, "ASTM D 2216: Standard Test Method for Laboratory Determination of Water (Moisture) Content of Soil and Rock by Mass," American Society for Testing and Materials, W. Conshohocken, PA.

ASTM, 2000e, "ASTM D 2166: Standard Test Method for Unconfined Compressive Strength of Cohesive Soil," American Society for Testing and Materials, W. Conshohocken, PA.

ASTM, 2000f, "ASTM D 3080: Standard Test Method for Direct Shear Test of Soils under Consolidated Drained Conditions," American Society for Testing and Materials, W. Conshohocken, PA.

ASTM, 2000g, "ASTM D 2435: Standard Test Method for One-Dimensional Consolidation Properties of Soils," American Society for Testing and Materials, W. Conshohocken, PA.

ASTM, 2000h, "ASTM D 5084: Standard Test Method for Measurement of Hydraulic Conductivity of Saturated Porous Materials Using a Flexible Wall Permeameter," American Society for Testing and Materials, W. Conshohocken, PA.

ASTM, 2000i, "ASTM D 1577: Standard Test Method for Laboratory Compaction Characteristics of Soil Using Modified Effort," American Society for Testing and Materials, W. Conshohocken, PA.

ASTM, 2000j, "ASTM C 150: Standard Specification for Portland Cement, " American Society for Testing and Materials, W. Conshohocken, PA, 2000.

ASTM, 2000k, "ASTM C 618: Standard Specification for Fly Ash and Raw or Calcined Natural Pozzolan for Use as a Mineral Admixture in Portland Cement Concrete, " American Society for Testing and Materials, W. Conshohocken, PA, 2000.

Balzamo, S., L. Castellano, and G. De Angelis, 1996, "Experimental and Theoretical Studies for Assessing the Retention Capacity of Cement Stabilized Materials for Land Disposal," *Stabilization and Solidification of Hazardous, Radioactive, and Mixed Wastes*, 3rd Volume, ASTM STP 1240, American Society for Testing and Materials.

CCR, 1984, Title 22 CCR, California Code of Regulations, Appendix II, Chapter 11, Div. 4.5, 66700.

Clendenning, T.G., A.E. Dalrymple, and T.W. Klym, 1975, "Current Technology in the Utilization and Disposal of Coal Ash," EngCon'75.

Conner, J.R., 1990, "Chemical Fixation and Solidification of Hazardous Waste," Van Nostrand Reinhold, New York.

CTM, 2000, "Resistance 'R' Value of Treated and Untreated Bases, Sub bases and Basement Soils (Stabilometer)," California Test Methods, California Department of Transportation.

Fleming, E.C., D.E. Averett, M.G. Channell, B.D. Perry, 1991, "An Evaluation of Solidification/Stabilization Technology for Buffalo River Sediment," Misc. Paper EL-91-11, U.S. Army Engineer Waterways Experiment Station, Vicksburg, Miss.

Guven, N., 1997, "Experiments on the Stabilization of a Dredge Sediment with Portland Cement and Lime," Rept, Dept. of Geosciences, Texas Tech Univ., Lubbock, TX.

Liu, C., and J.B. Evett, 1998, *Soils and Foundations*, Prentice-Hall, Englewood, N.J.

Loest and Wilk, 1998, "Brownsfield Reuse of Dredged New York Harbor Sediment by Cement-Based Solidification/Stabilization." Portland Cement Association Conference.

Myers, T.E. and M.E. Zappi, 1992, "Laboratory Evaluation of Stabilization/ Solidification Technology for Reducing the Mobility of Heavy Metals in New Bedford Harbor Superfund Site Sediment," *Stabilization and Solidification of Hazardous, Radioactive, and Mixed Wastes,* 2nd Vol., ASTM STP 1123.

Myers, T.E., D.E. Averett, E.C. Fleming, M.G. Channell, 1994, "Solidification/Stabilization Technology for Reducing the Mobility of Heavy Metals in Polluted Sediments," Proc. 15th U.S./Japan Experts Meeting: Management of Bottom Sediments Containing Toxic Substances, San Pedro, CA.

NOAA, 1990, "The Pontential for Biological Effects of Sediment-Sorbed Contaminants Tested in the National Status and Trends Program," Tech. Memo. NOS OMA 52, National Oceanic and Atmospheric Administration.

Sell, N.J., M.A. Revall, W. Bentley and T. H. McIntosh, 1992, "Solidification and Stabilization of Phenol and Chlorinated Phenol Contaminated Soils," Stabilization and Solidification of Hazardous, Radioactive, and Mixed Wastes, 2nd Vol., ASTM STP 1123.

U.S. Army Corps of Engineers (USACE). 2000. Los Angeles County Regional Dredged Material Management Plan (DMMP) 905(b) Reconnaissance Report. Los Angeles District. September 2000.

U.S. EPA, 1994, "Method 1312 Synthetic Precipitation Leaching Procedure," U.S. Environmental Protection Agency.

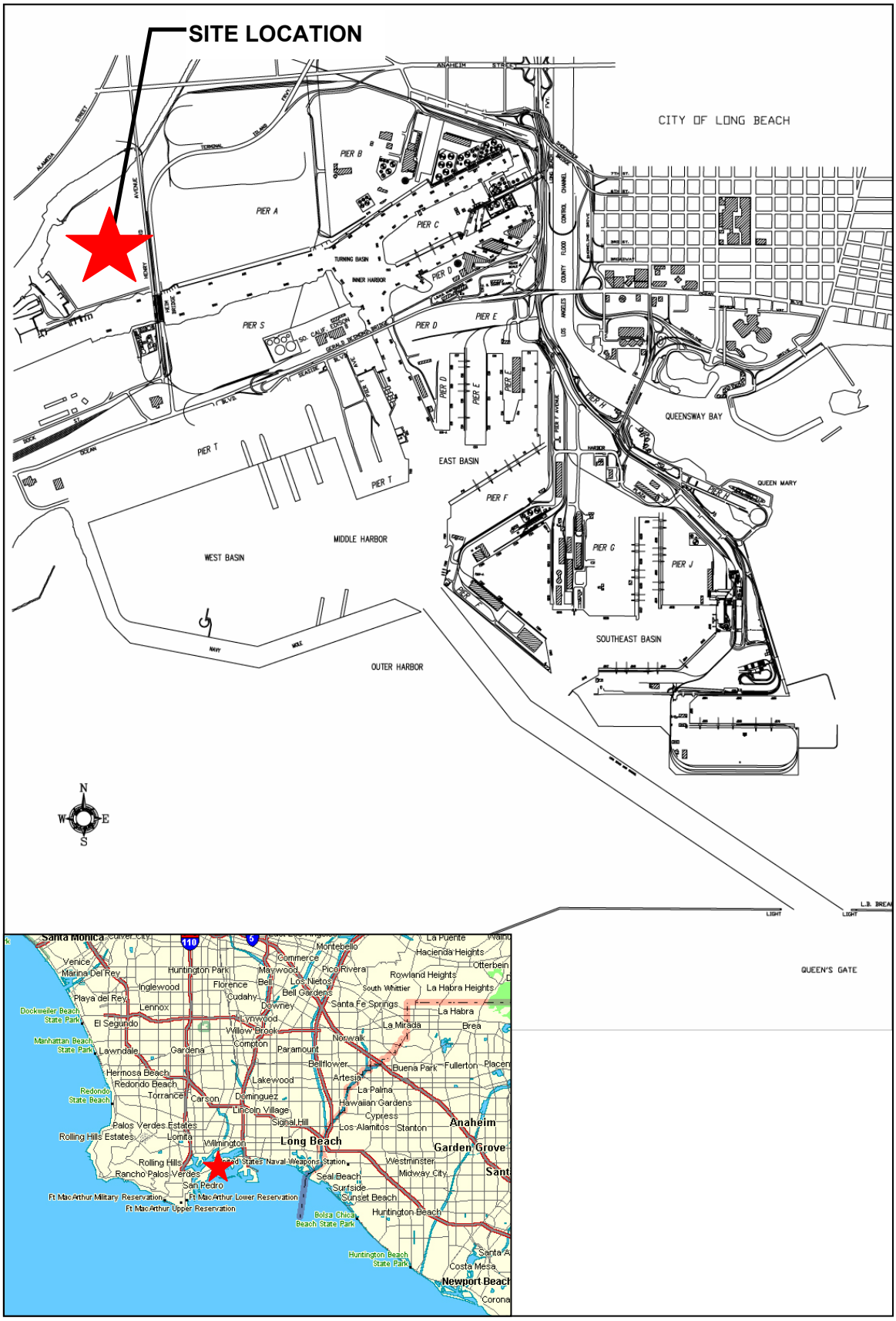

Figure B2-1
Project Site

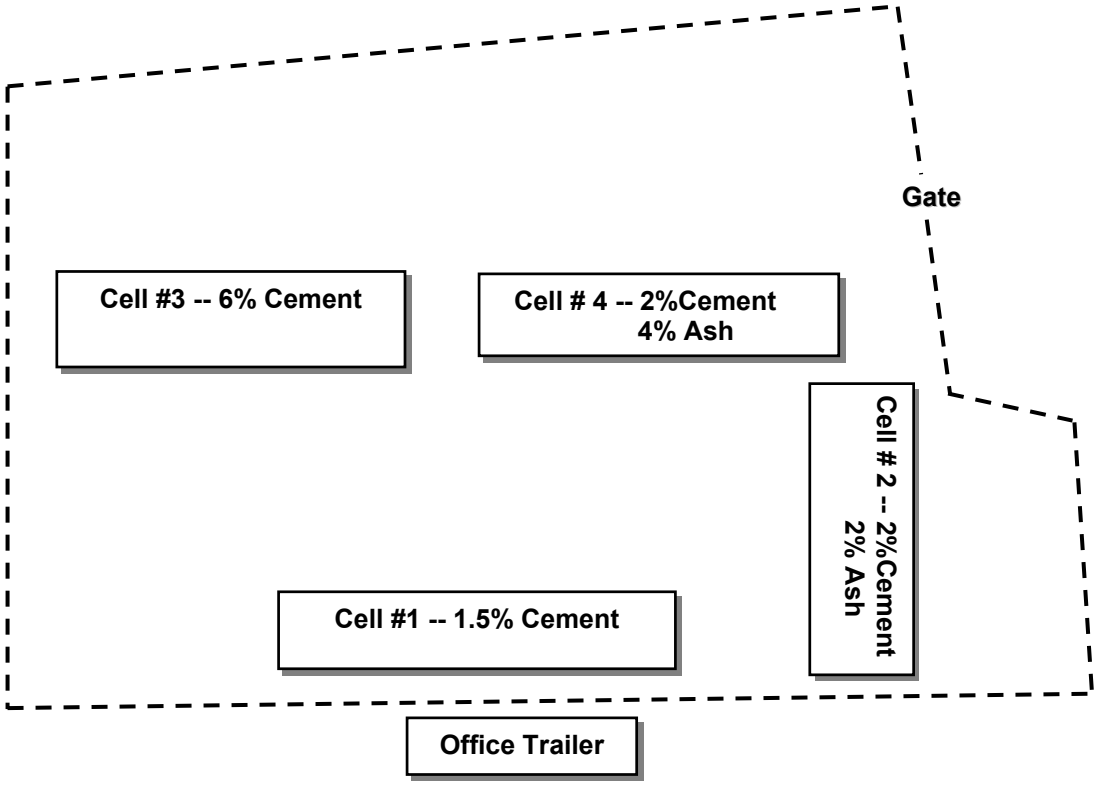

(a) Treatment Site Layout

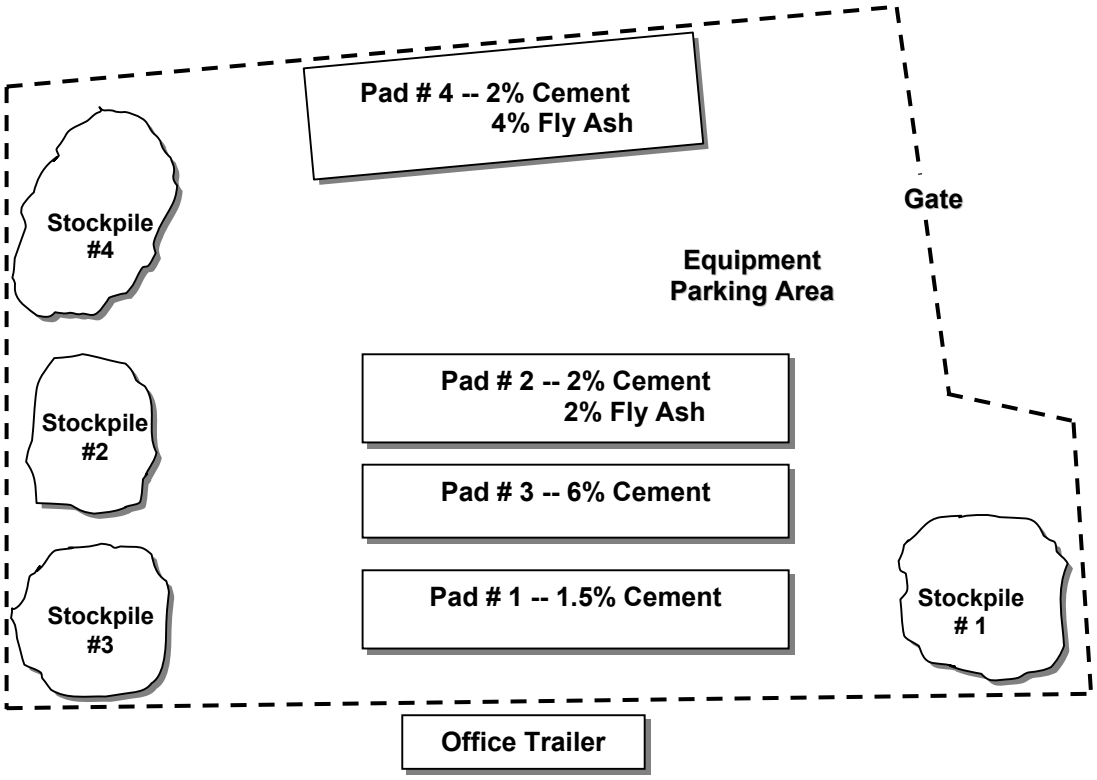

(b) On-Site Compaction Layout

Figure B2-2
Treatment and Compaction Site Layout

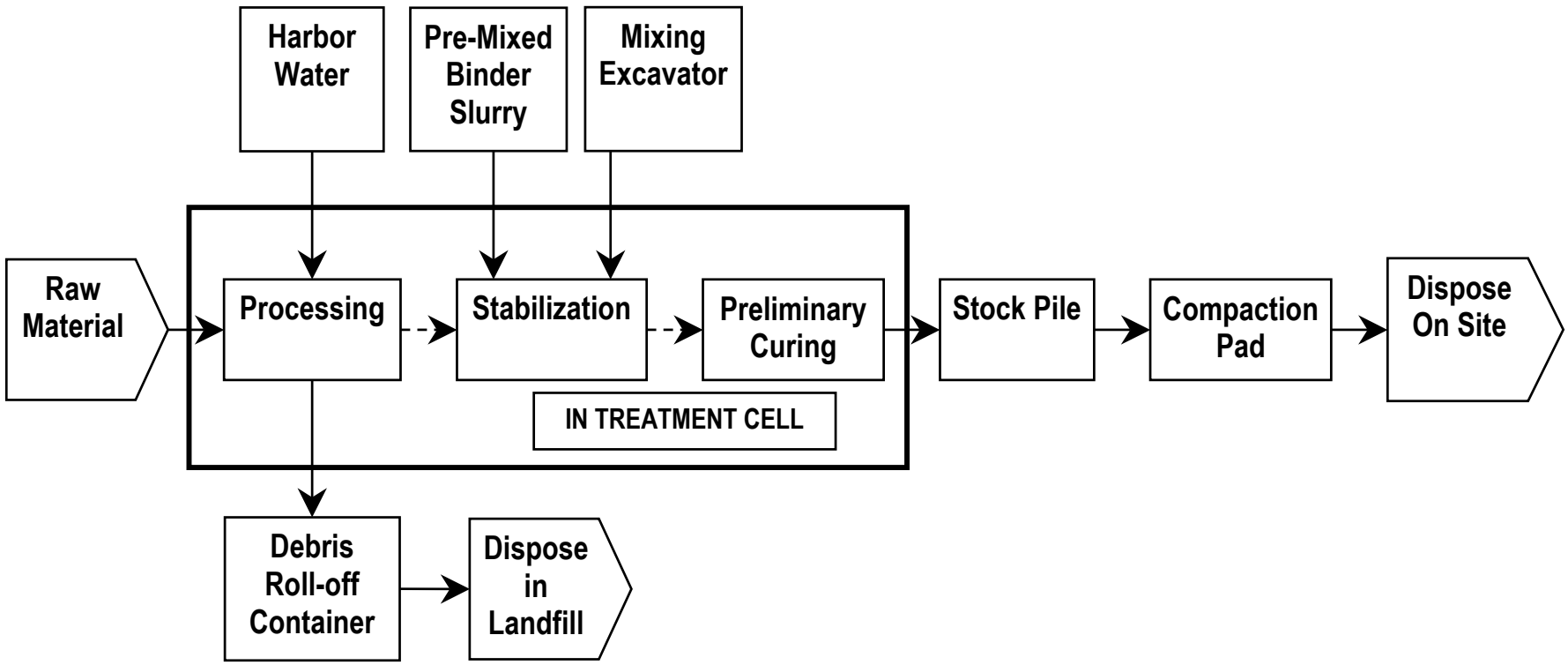

Figure B2-3
Cement Stabilization Process Diagram

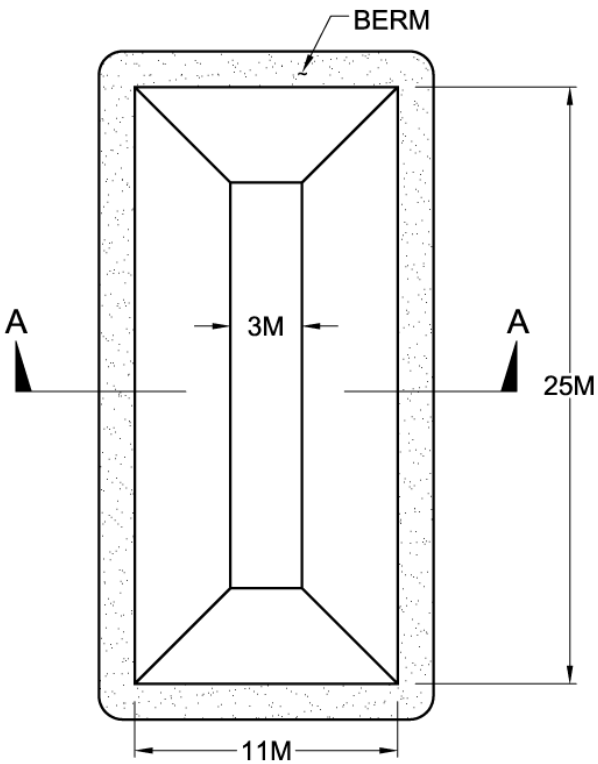

PLAN

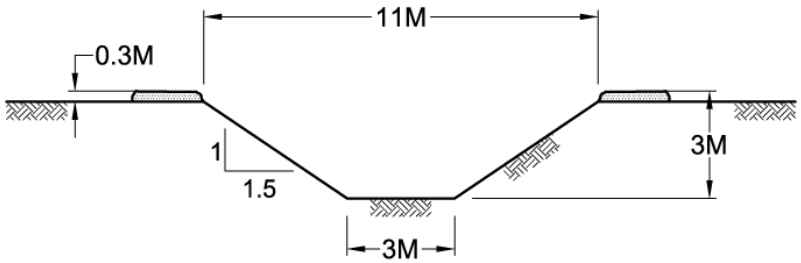

SECTION A-A

Figure B2-4
Treatment Cell