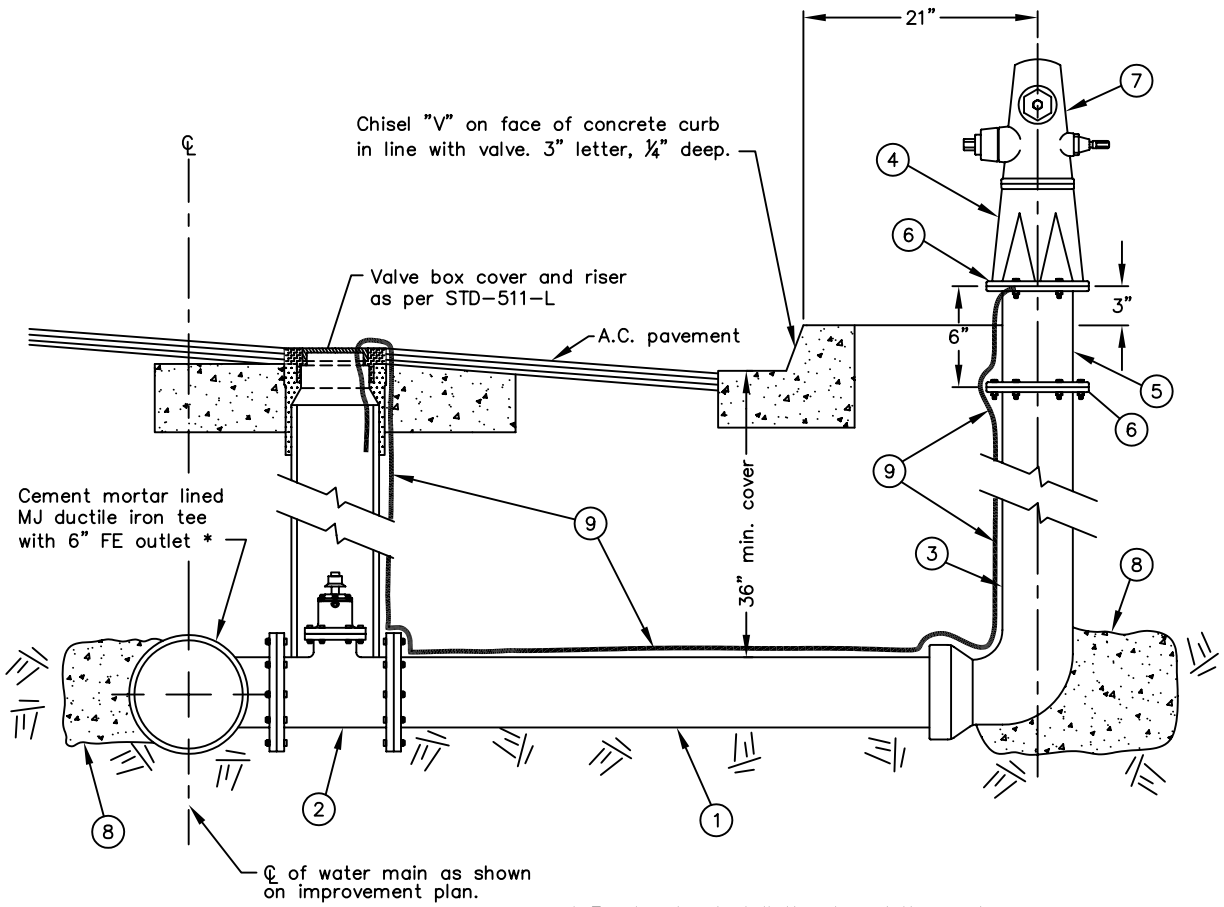


## CONSTRUCTION NOTES:

1. 6" C-900 P.V.C pipe.
2. 6" resilient wedge gate valve, FExMJ with retainer gland.
3. 6"x36" ductile iron hydrant bury, push-on or MJ.
4. Fire hydrant shall be bronze 6"x4"x2½" Jones J-3700. Hydrant shall be equipped with 1-4" outlet normal to curb face and 1-2½" outlet parallel to curb face. In commercial & high density zones use bronze 6"x4"x2½"x2½" Jones J-3765 hydrant or 6"x4"x4"x2½" Jones J-3775 hydrant.
5. 6"x6" breakable hydrant flange spool.
6. Breakaway bolts and flange gasket; 6 hole pattern.
7. Cast bronze tapered hydrant outlet cap. Plastic caps are strictly prohibited.
8. Concrete thrust block per STD-510-L-A.
9. The tracing wire shall be attached outside the valve riser and 18" of wire shall be drop into the riser from the valve box.

## GENERAL NOTES:

1. Caps & operating valve stems shall have 1⅛" pentagonal operating nuts.
2. All flange bolts shall be type 316 stainless steel coated with anti-seize compound (except where otherwise noted).
3. Paint fire hydrant with 2 coats of white, Rustoleum paint.

| | |
|---|---|
| CITY OF NEWPORT BEACH<br>PUBLIC WORKS DEPARTMENT | APPROVED: |
| WET BARREL<br>FIRE HYDRANT | RCE NO. 36106 — PUBLIC WORKS DIRECTOR |
| | Drawn: M. Elias — Scale: N.T.S. |
| | Date: Jan. 2004 — F:\USERS\PBW\Shared\CAD_STD\STD Details\2003_Std\STD Water\ |
| | DRAWING NO. STD-500-L |