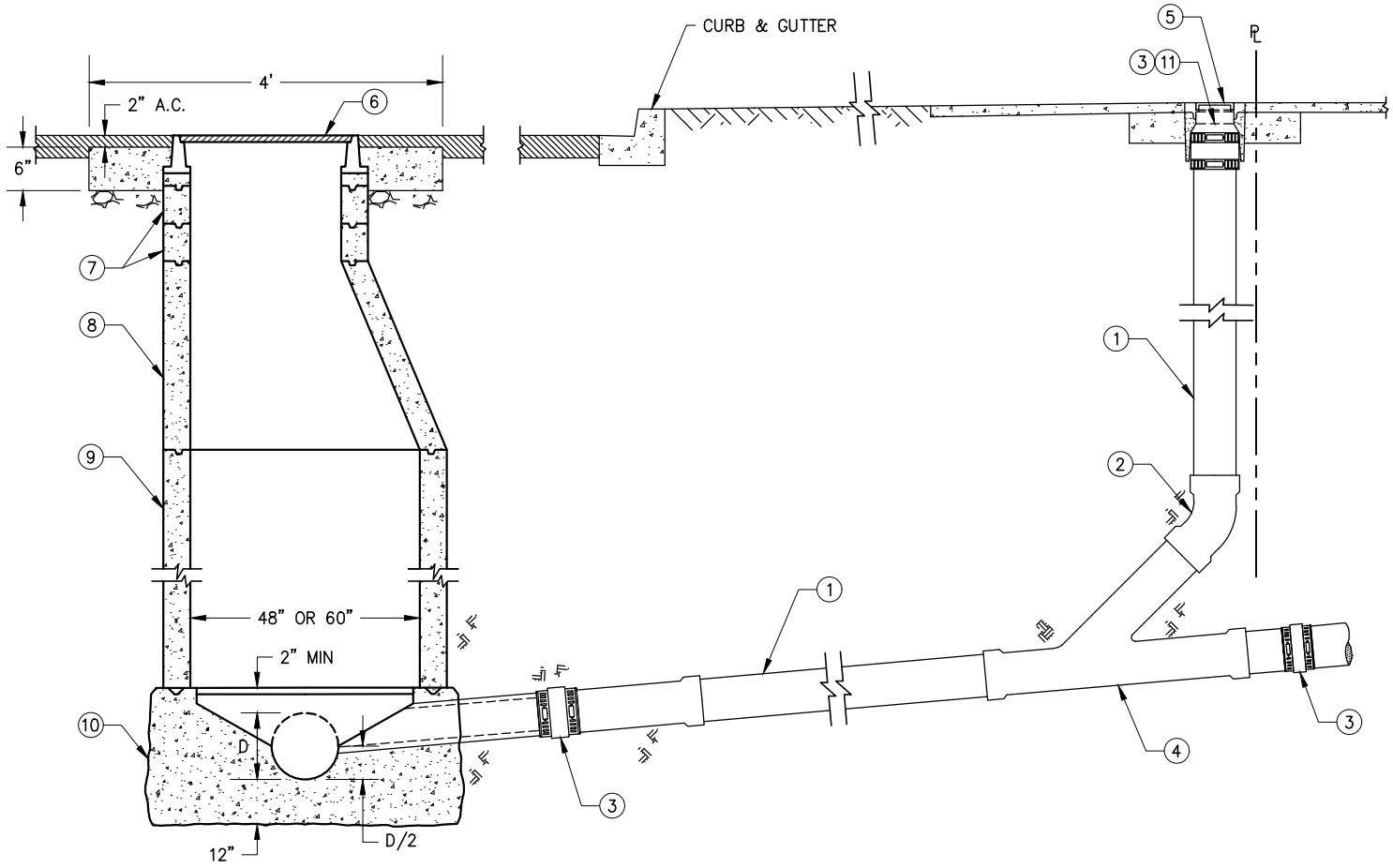


## CONSTRUCTION NOTES:

1. 8" VCP (OR SDR-35 PVC) SEWER PIPE WITH GASKET, INTEGRAL BELL AND SPIGOT JOINTS.
2. 8" VCP (OR SDR-35 PVC) 45° BEND.
3. 8" RUBBER MECHANICAL BANDED SEAL COUPLING; STAINLESS STEEL BANDS; MISSION CLAY ADJUSTABLE REPAIR COUPLING (TYPE 2) OR CITY-APPROVED EQUAL.
4. 8"X8" VCP (OR SDR-35 PVC) WYE BRANCH FITTING.
5. SEWER CLEANOUT COVER PER APPLICABLE PORTIONS OF STD 513 WITH COVER MARKED "SEWER". ALHAMBRA FOUNDRY A-1244.
6. MANHOLE FRAME AND COVER PER STD 318.
7. 24" DIAMETER GRADE RINGS AS IN STD 400.
8. 48"X24" OR 60"X30" ECCENTRIC MANHOLE CONE.
9. 48" OR 60" DIAMETER MANHOLE SECTION; PRECAST REINFORCED CONCRETE, HEIGHT AS REQUIRED.
10. POURED-IN-PLACE CONCRETE MANHOLE BASE SECTION. REFER TO STD 400.
11. INSTALL ABS STOPPER IN RUBBER COUPLING. USE MISSION CLAY PRODUCTS STOPPER OR APPROVED EQUAL.

## GENERAL NOTES:

1. VCP SHALL BE HIGH STRENGTH.
2. DETAIL MAY BE USED FOR 6-INCH LATERAL CONNECTIONS. SUBSTITUTE 6-INCH VCP WHERE 8-INCH IS NOTED. REPLACE SEWER CLEANOUT COVER WITH 4tt VALVE BOX AND COVER PER APPLICABLE PORTIONS OF STD 513. MARK LID "SEWER".
3. SEWER PIPE MATERIAL SHALL MATCH INCOMING CONNECTOR PIPELINE MATERIAL, UNLESS OTHERWISE APPROVED BY THE UTILITIES DEPARTMENT.

| APP. | | | | NO. | DATE | DESCRIPTION OF REVISIONS |
|---|---|---|---|---|---|---|
| CITY ENGINEER | 51568 RCE | 11/24/2020 DATE | | | | |

CITY OF NEWPORT BEACH DEPARTMENT OF PUBLIC WORKS

DRAWN: P. KHARAZMI

DATE: 11/3/2020

# 8" LATERAL CONNECTION

STANDARD DRAWING NO.

405

SHEET 1 OF 1